2016 MULE PRO-FXT™ EPS PARTS DIAGRAM

Drive Shaft-Rear

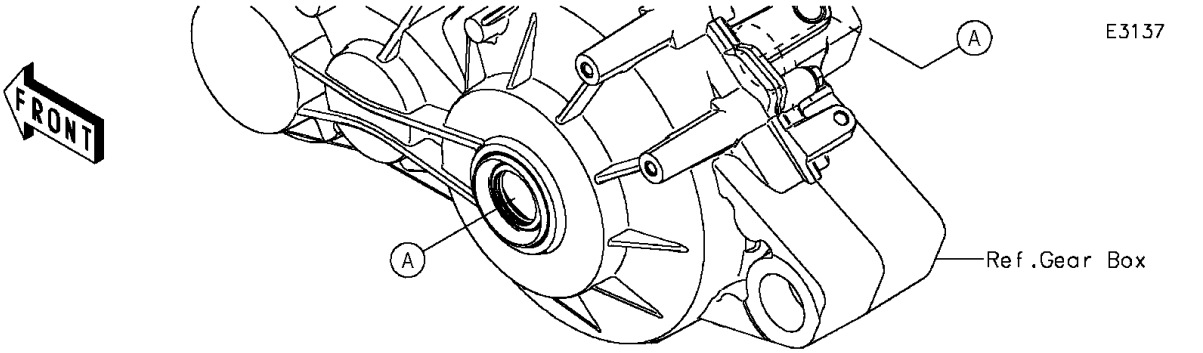

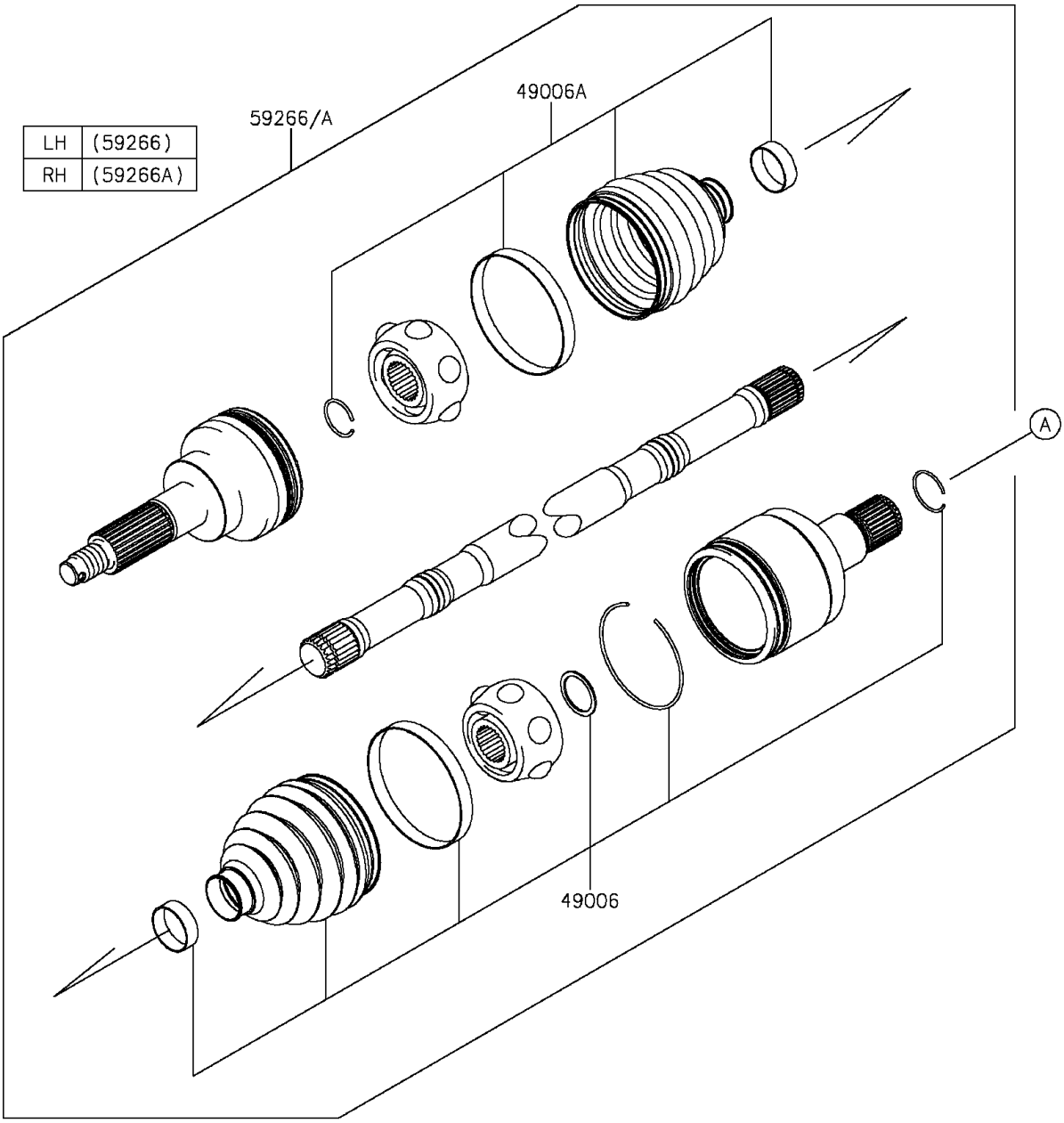

LH	(59266)
RH	(59266A)

© 2025 Kawasaki Motors Corp., U.S.A.

2016 MULE PRO-FXT™ EPS PARTS LIST

Drive Shaft-Rear

ITEM NAME	PART NUMBER	QUANTITY
BOOT,INSIDE (Ref # 49006)	49006-0585	2
BOOT,OUTSIDE (Ref # 49006A)	49006-0586	2
JOINT-BALL,RR,LH (Ref # 59266)	59266-0049	1
JOINT-BALL,RR,RH (Ref # 59266A)	59266-0050	1

© 2025 Kawasaki Motors Corp., U.S.A.