2020 MULE PRO-FXT™ RANCH EDITION PARTS DIAGRAM

Fuel Injection

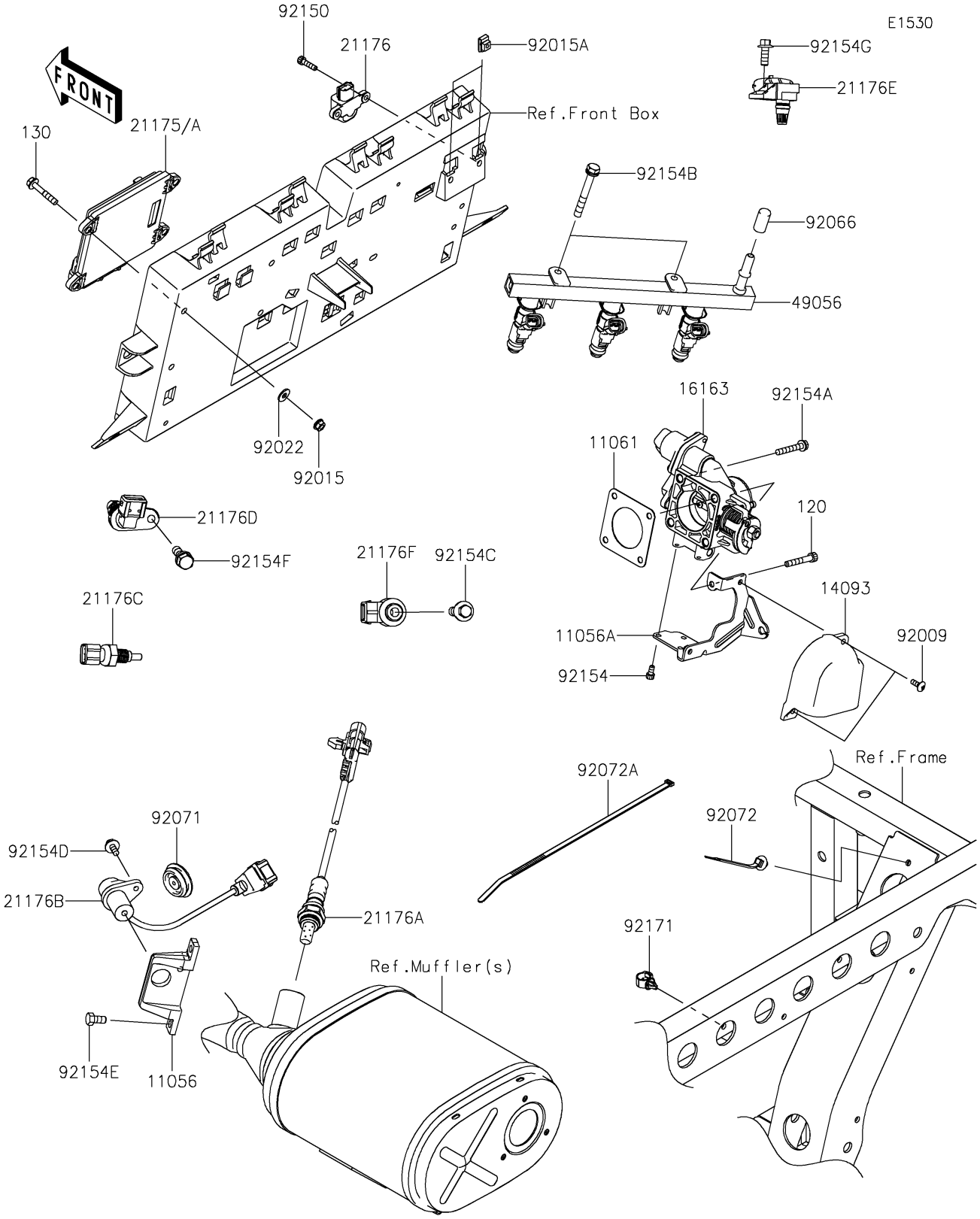

© 2025 Kawasaki Motors Corp., U.S.A.

2020 MULE PRO-FXT™ RANCH EDITION PARTS LIST

Fuel Injection

ITEM NAME	PART NUMBER	QUANTITY
BRACKET,CRANKSHAFT POSITION (Ref # 11056)	11056-2680	1
BRACKET,THROTTLE CABLE (Ref # 11056A)	11056-7495	1
GASKET,THROTTLE (Ref # 11061)	11061-0954	1
BOLT-SOCKET,6X40 (Ref # 120)	120CA0640	1
BOLT-FLANGED,6X35 (Ref # 130)	130BA0635	4
COVER,THROTTLE (Ref # 14093)	14093-0043	1
THROTTLE-ASSY (Ref # 16163)	16163-0816	1
CONTROL UNIT-ELECTRONIC,DFI (Ref # 21175)	21175-1167	1
CONTROL UNIT-ELECTRONIC,DFI (Ref # 21175A)	21175-1180	1
SENSOR,VEHICLE-DOWN (Ref # 21176)	21176-0026	1
SENSOR,OXYGEN (Ref # 21176A)	21176-0773	1
SENSOR,CRANKSHAFT POSITION (Ref # 21176B)	21176-0795	1
SENSOR,WATER TEMP (Ref # 21176C)	21176-0796	1
SENSOR,CAMSHAFT POSITION (Ref # 21176D)	21176-0797	1
SENSOR,AIR INTAKE TEMP (Ref # 21176E)	21176-0798	1
SENSOR,EXPLOSION (Ref # 21176F)	21176-0799	1
PIPE-INJECTION (Ref # 49056)	49056-0038	1
SCREW,5X14,WHITE (Ref # 92009)	92009-1366	2
NUT,FLANGED,6MM (Ref # 92015)	92015-1367	4
NUT,5MM (Ref # 92015A)	92015-1627	2
WASHER (Ref # 92022)	92022-2247	4
PLUG (Ref # 92066)	92066-0810	1
GROMMET (Ref # 92071)	92071-0730	1
BAND,OS170-FT7(BLACK) (Ref # 92072)	92072-1414	1
BAND,L=292.1 (Ref # 92072A)	92072-3509	3
BOLT,SOCKET,5X20 (Ref # 92150)	92150-1019	2
BOLT,SOCKET,5X10 (Ref # 92154)	92154-1396	3
BOLT,6X38 (Ref # 92154A)	92154-1589	3
BOLT,6X50 (Ref # 92154B)	92154-1591	2

© 2025 Kawasaki Motors Corp., U.S.A.

2020 MULE PRO-FXT™ RANCH EDITION PARTS LIST

Fuel Injection

ITEM NAME	PART NUMBER	QUANTITY
BOLT,FLANGED,8X30 (Ref # 92154C)	92154-1592	1
BOLT,FLANGED,6X12 (Ref # 92154D)	92154-1593	1
BOLT,6X12 (Ref # 92154E)	92154-1594	2
BOLT,8X16 (Ref # 92154F)	92154-1595	1
BOLT,FLANGED,6X16 (Ref # 92154G)	92154-1596	1
CLAMP,13MM DIA. (Ref # 92171)	92171-1415	1

© 2025 Kawasaki Motors Corp., U.S.A.