2019 MULE PRO-FX™ EPS PARTS DIAGRAM

Labels

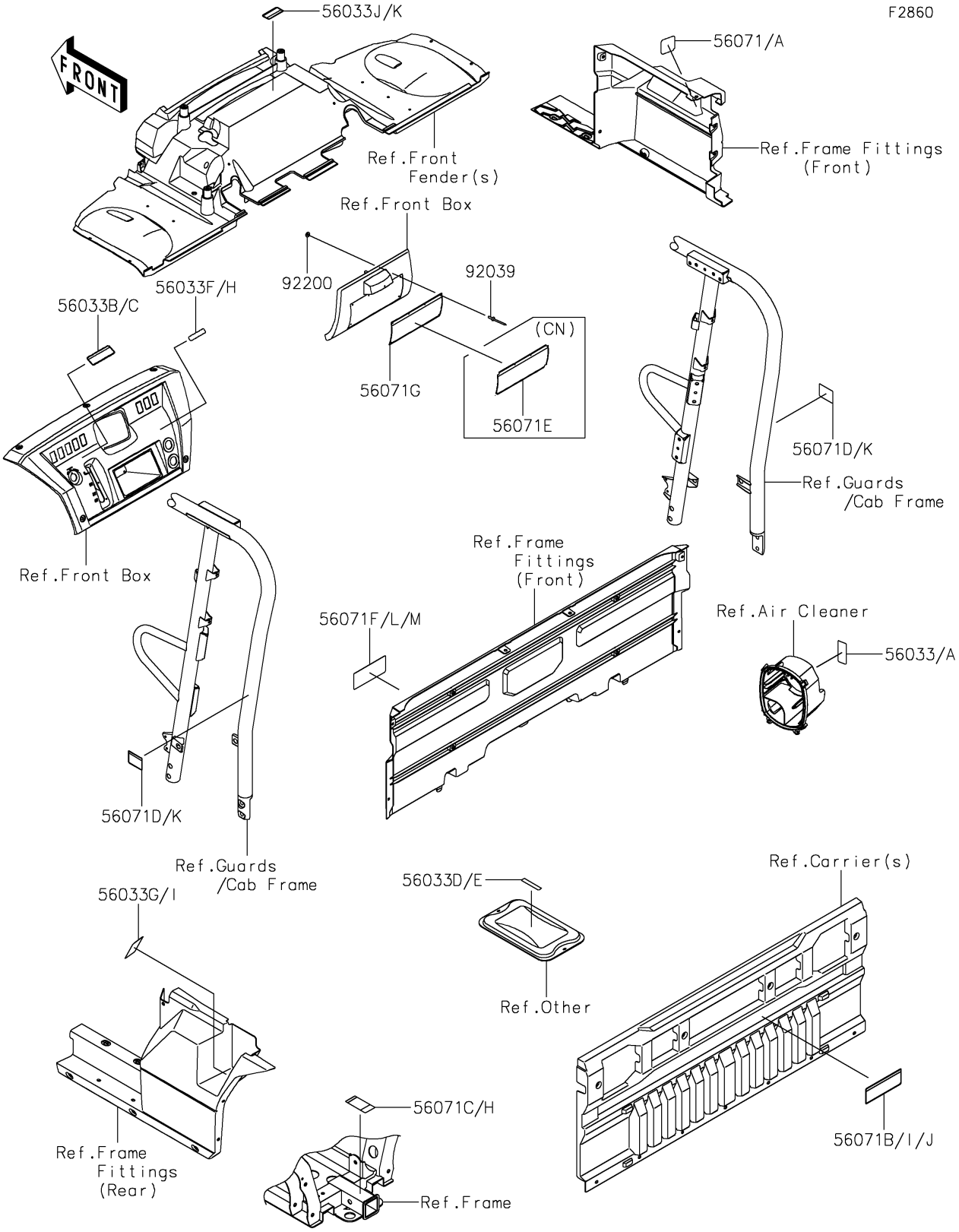

© 2024 Kawasaki Motors Corp., U.S.A.

2019 MULE PRO-FX™ EPS PARTS LIST

Labels

ITEM NAME	PART NUMBER	QUANTITY
LABEL-MANUAL,AIR CLEANER (Ref # 56033)	56033-0724	1
LABEL-MANUAL,AIR CLEANER (Ref # 56033A)	56033-0731	1
LABEL-MANUAL,SHIFT NOTICE (Ref # 56033B)	56033-0822	1
LABEL-MANUAL,SHIFT NOTICE (Ref # 56033C)	56033-0826	1
LABEL-MANUAL,STORAGE MAX LOAD (Ref # 56033D)	56033-0966	1
LABEL-MANUAL,STORAGE MAX LOAD (Ref # 56033E)	56033-0967	1
LABEL-MANUAL,DC OUTLET (Ref # 56033F)	56033-0993	1
LABEL-MANUAL,DRIVE BELT (Ref # 56033G)	56033-0996	1
LABEL-MANUAL,DC OUTLET (Ref # 56033H)	56033-0997	1
LABEL-MANUAL,DRIVE BELT (Ref # 56033I)	56033-1000	1
LABEL-MANUAL,FRONT HOOD (Ref # 56033J)	56033-1379	1
LABEL-MANUAL,FRONT HOOD (Ref # 56033K)	56033-1380	1
LABEL-WARNING,GASOLINE (Ref # 56071)	56071-0588	1
LABEL-WARNING,GASOLINE (Ref # 56071A)	56071-0593	1
LABEL-WARNING,CARGO CAPA. (Ref # 56071B)	56071-0700	1
LABEL-WARNING,TRAILER HITCH (Ref # 56071C)	56071-0701	1
LABEL-WARNING,BED OPERATION (Ref # 56071D)	56071-0704	2
LABEL-WARNING,GENERAL (Ref # 56071E)	56071-0705	1
LABEL-WARNING,TIRE&LOAD (Ref # 56071F)	56071-0707	1
LABEL-WARNING,GENERAL (Ref # 56071G)	56071-0710	1
LABEL-WARNING,TRAILER HITCH (Ref # 56071H)	56071-0711	1
LABEL-WARNING,CARGO CAPA. (Ref # 56071I)	56071-0715	1
LABEL-WARNING,CARGO CAPA. (Ref # 56071J)	56071-0716	1
LABEL-WARNING,BED OPERATION (Ref # 56071K)	56071-0718	2
LABEL-WARNING,TIRE&LOAD (Ref # 56071L)	56071-0719	1
LABEL-WARNING,TIRE&LOAD (Ref # 56071M)	56071-0721	1
RIVET,3.2X8 (Ref # 92039)	92039-3763	6
WASHER,3.5X8X1 (Ref # 92200)	92200-1251	6

© 2024 Kawasaki Motors Corp., U.S.A.