2018 MULE PRO-FX™ PARTS DIAGRAM

Crankshaft/Piston(s)

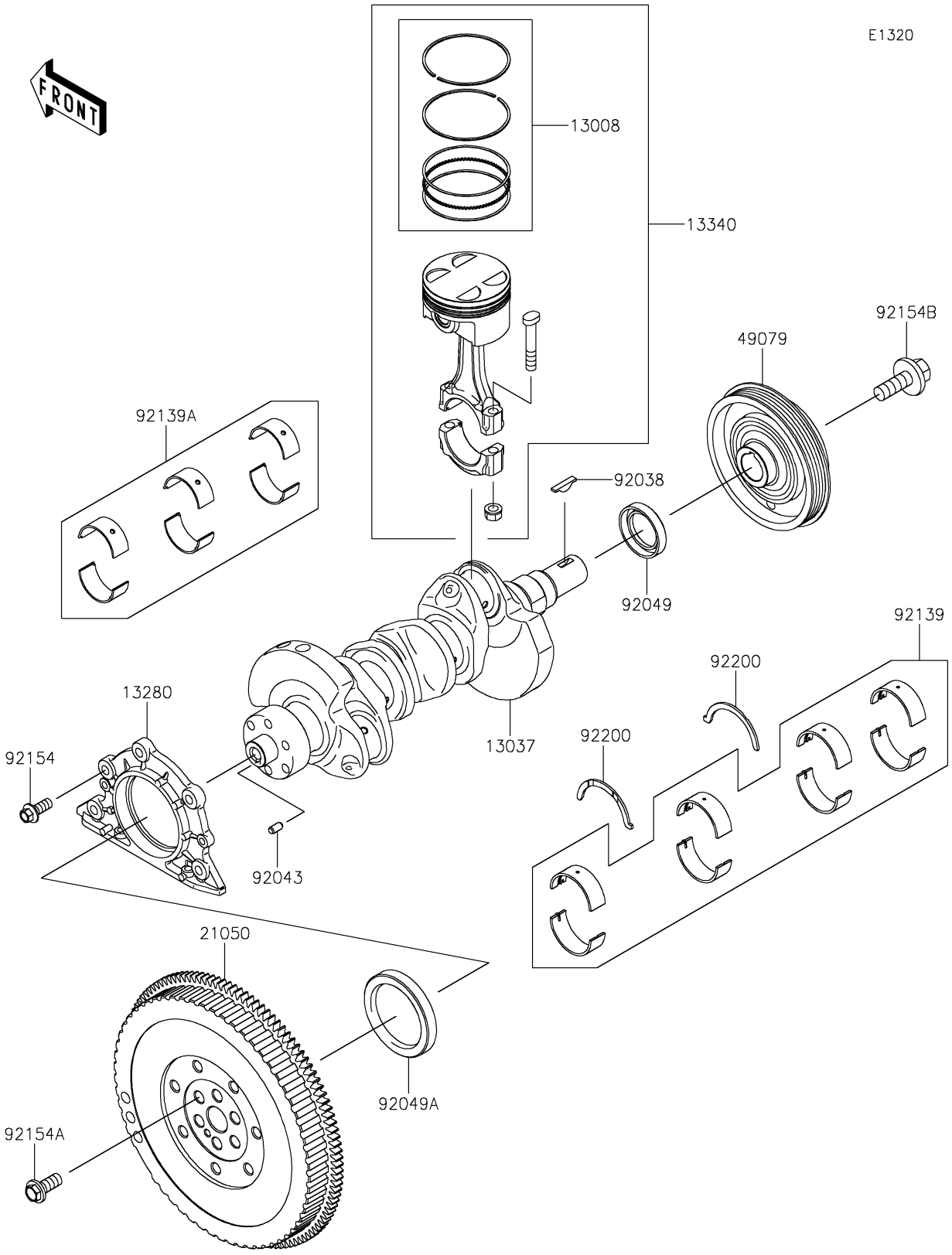

© 2024 Kawasaki Motors Corp., U.S.A.

2018 MULE PRO-FX™ PARTS LIST

Crankshaft/Piston(s)

ITEM NAME	PART NUMBER	QUANTITY
RING-SET-PISTON (Ref # 13008)	13008-0561	3
CRANKSHAFT (Ref # 13037)	13037-0854	1
HOLDER (Ref # 13280)	13280-0826	1
PISTON-ASSY-ENGINE (Ref # 13340)	13340-0003	3
FLYWHEEL (Ref # 21050)	21050-0008	1
PULLEY-BELT,CRANKSHAFT (Ref # 49079)	49079-0021	1
KEY (Ref # 92038)	92038-0005	1
PIN (Ref # 92043)	92043-0830	1
SEAL-OIL (Ref # 92049)	92049-0774	1
SEAL-OIL (Ref # 92049A)	92049-0775	1
BUSHING (Ref # 92139)	92139-0833	1
BUSHING (Ref # 92139A)	92139-0838	1
BOLT,FLANGED,8X20 (Ref # 92154)	92154-1586	5
BOLT,FLYWHEEL (Ref # 92154A)	92154-1587	6
BOLT,CRANKSHAFT PULLEY (Ref # 92154B)	92154-1831	1
WASHER (Ref # 92200)	92200-1682	2

© 2024 Kawasaki Motors Corp., U.S.A.