2018 MULE PRO-FXT™ EPS PARTS DIAGRAM

Gear Box

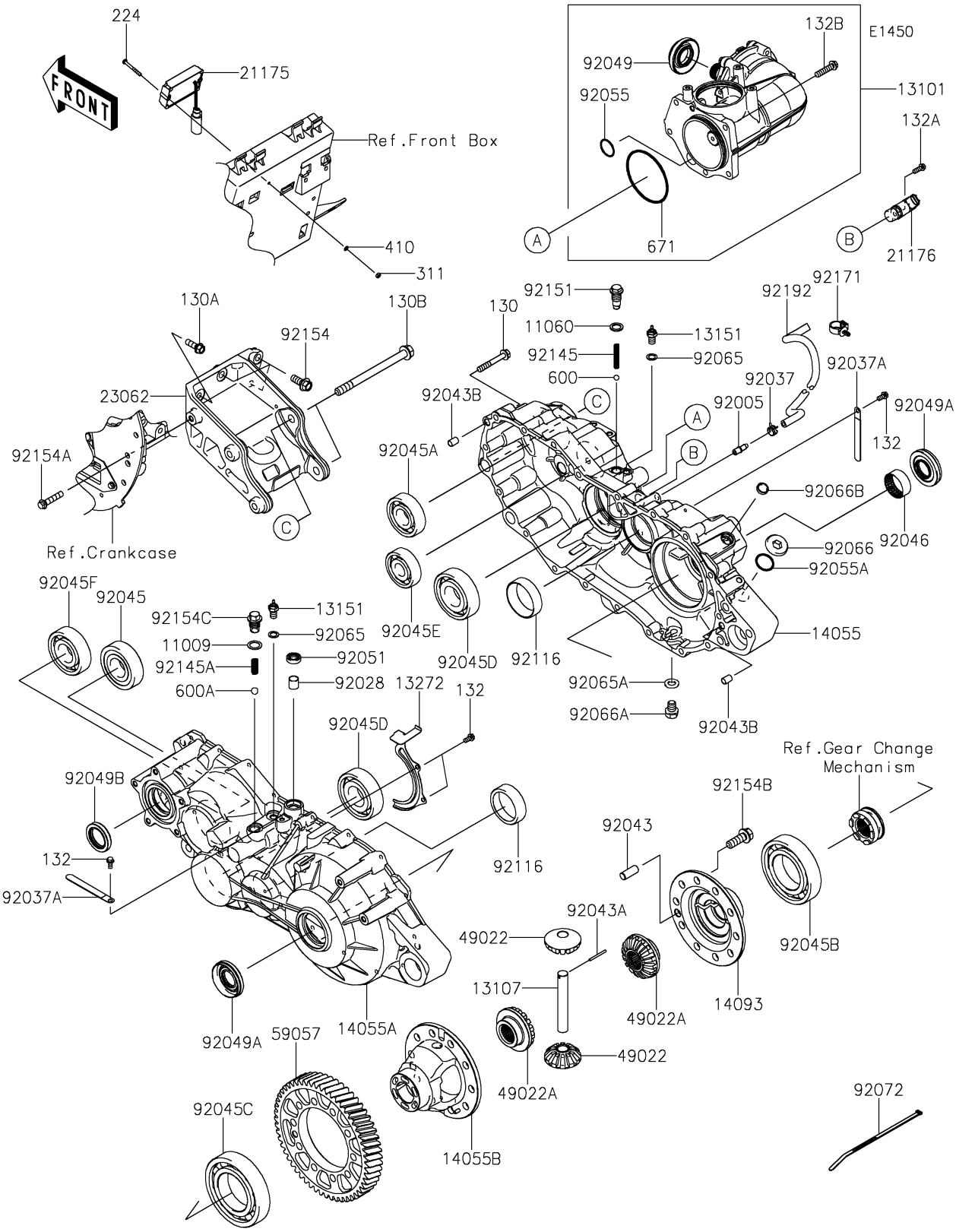

© 2026 Kawasaki Motors Corp., U.S.A.

2018 MULE PRO-FXT™ EPS PARTS LIST

Gear Box

ITEM NAME	PART NUMBER	QUANTITY
GASKET,15.5X22X1 (Ref # 11009)	11009-1008	1
GASKET,14X20X2 (Ref # 11060)	11060-1287	1
GEAR-ASSY,PARTICULAR (Ref # 13101)	13101-0636	1
SHAFT (Ref # 13107)	13107-0793	1
SWITCH-COMP,NEUTRAL (Ref # 13151)	13151-1080	2
PLATE (Ref # 13272)	13272-1624	1
CASE-GEAR,RH (Ref # 14055)	14055-0607	1
CASE-GEAR,LH (Ref # 14055A)	14055-0608	1
CASE-GEAR,DIFF (Ref # 14055B)	14055-0614	1
COVER,DIFF (Ref # 14093)	14093-0048	1
CONTROL UNIT-ELECTRONIC,DIFF (Ref # 21175)	21175-0885	1
SENSOR,ROTATION (Ref # 21176)	21176-0767	1
BRACKET-COMP (Ref # 23062)	23062-0807	1
GEAR-BEVEL,PINION,12T (Ref # 49022)	49022-0585	2
GEAR-BEVEL,OUTPUT,16T (Ref # 49022A)	49022-0589	2
GEAR-HELICAL,55T (Ref # 59057)	59057-0012	1
FITTING,BREATHER (Ref # 92005)	92005-1127	1
BUSHING (Ref # 92028)	92028-1347	1
CLAMP,TUBE (Ref # 92037)	92037-1505	1
CLAMP (Ref # 92037A)	92037-1993	2
PIN,DOWEL,12X30 (Ref # 92043)	92043-0789	1
PIN,DOWEL (Ref # 92043A)	92043-0806	1
PIN,DOWEL,10X14 (Ref # 92043B)	92043-1037	2
BEARING-BALL,63/32 (Ref # 92045)	92045-0764	1
BEARING-BALL,63/28 (Ref # 92045A)	92045-0765	1
BEARING-BALL,6212 (Ref # 92045B)	92045-0766	1
BEARING-BALL,6213 (Ref # 92045C)	92045-0767	1
BEARING-BALL,6307C3 (Ref # 92045D)	92045-0768	2
BEARING-BALL,B22-19C3 UR (Ref # 92045E)	92045-0769	1

© 2026 Kawasaki Motors Corp., U.S.A.

2018 MULE PRO-FXT™ EPS PARTS LIST

Gear Box

ITEM NAME	PART NUMBER	QUANTITY
BEARING-BALL,63/32C3 (Ref # 92045F)	92045-1364	1
BEARING-NEEDLE,BTM35.6 (Ref # 92046)	92046-0612	1
SEAL-OIL (Ref # 92049)	92049-0160	1
SEAL-OIL (Ref # 92049A)	92049-0749	2
SEAL-OIL,TC32488 (Ref # 92049B)	92049-1361	1
SEAL-OIL,TB13225.5 (Ref # 92051)	92051-005	1
RING-O,1.9X26.2 (Ref # 92055)	92055-0782	1
RING-O,25.7X2.4 (Ref # 92055A)	92055-1136	1
GASKET,10.5X16X1 (Ref # 92065)	92065-058	2
GASKET,12X22X2 (Ref # 92065A)	92065-097	1
PLUG,25X8 (Ref # 92066)	92066-0012	1
BOLT-FLANGED,8X55 (Ref # 130)	130BA0855	18
BOLT-FLANGED,8X25 (Ref # 130A)	130CA0825	1
BOLT-FLANGED,12X150 (Ref # 130B)	130CA12150	2
BOLT-FLANGED-SMALL,6X12 (Ref # 132)	132BA0612	4
BOLT-FLANGED-SMALL,6X16 (Ref # 132A)	132BA0616	1
BOLT-FLANGED-SMALL,8X35 (Ref # 132B)	132BA0835	5
SCREW-PAN-WP-CROS,4X35 (Ref # 224)	224AA0435	1
NUT-HEX,4MM (Ref # 311)	311AA0400	1
WASHER-PLAIN-SMALL,4MM (Ref # 410)	410AA0400	1
BALL-STEEL,5/16 (Ref # 600)	600A1000	1
BALL-STEEL,13/32 (Ref # 600A)	600A1300	1
O RING (Ref # 671)	671D2585	1
PLUG,OIL DRAIN,12X15 (Ref # 92066A)	92066-1174	1
PLUG (Ref # 92066B)	92066-7014	1
BAND,L=292.1 (Ref # 92072)	92072-3509	AR
BEARING-ROLLER,HR32206JA LC (Ref # 92116)	92116-0008	2
SPRING (Ref # 92145)	92145-1589	1
SPRING (Ref # 92145A)	92145-1590	1

© 2026 Kawasaki Motors Corp., U.S.A.

2018 MULE PRO-FXT™ EPS PARTS LIST

Gear Box

ITEM NAME	PART NUMBER	QUANTITY
BOLT,CHANGE POSITION (Ref # 92151)	92151-1687	1
BOLT,FLANGED,10X25 (Ref # 92154)	92154-1329	3
BOLT,FLANGED,8X40 (Ref # 92154A)	92154-1331	1
BOLT,FLANGED,12X35 (Ref # 92154B)	92154-1332	10
BOLT,CHANGE POSITION (Ref # 92154C)	92154-1366	1
CLAMP (Ref # 92171)	92171-0453	1
TUBE,BREATHER (Ref # 92192)	92192-1340	1

© 2026 Kawasaki Motors Corp., U.S.A.