2017 MULE PRO-DXT™ EPS DIESEL PARTS DIAGRAM

Frame Fittings(Rear)

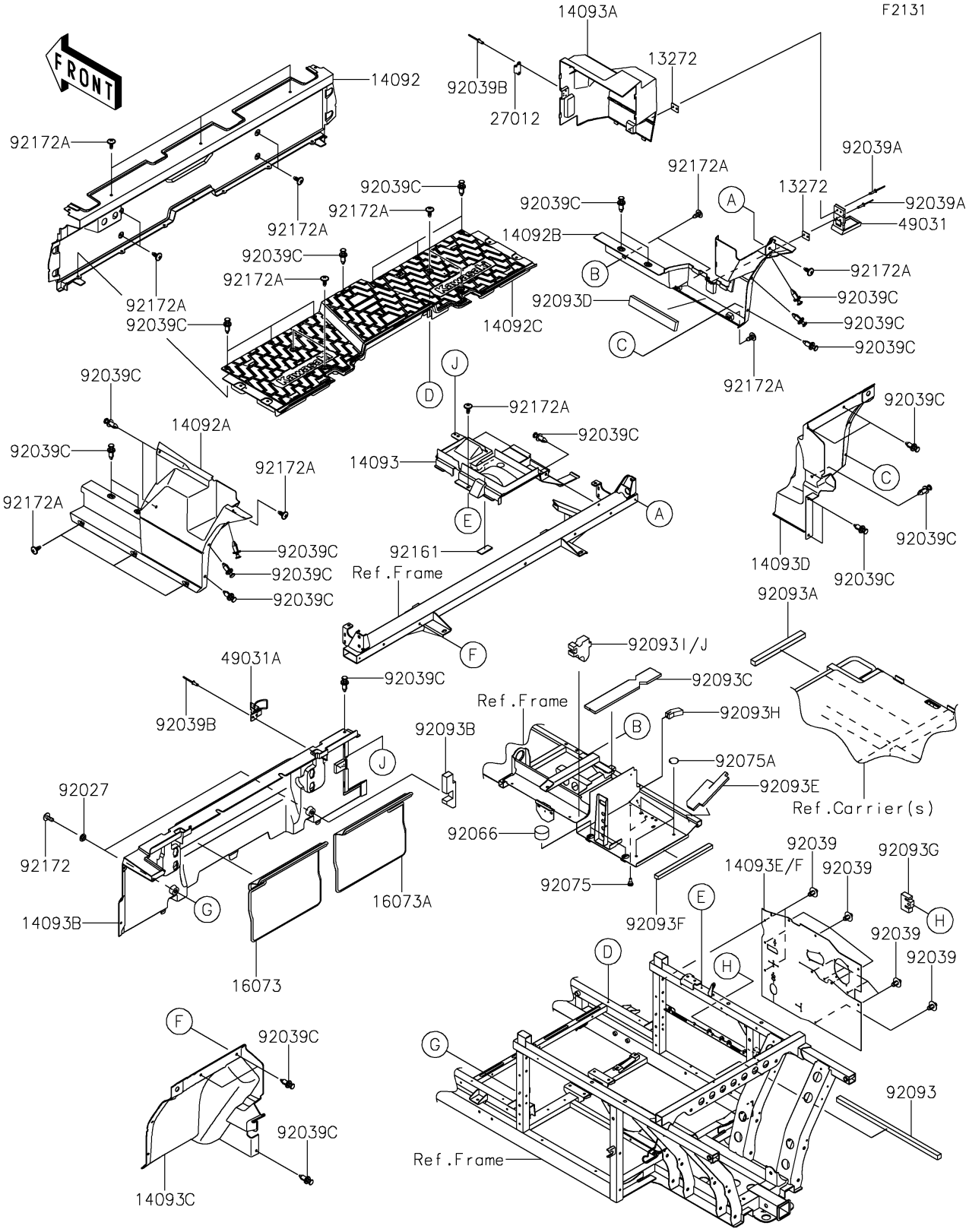

© 2025 Kawasaki Motors Corp., U.S.A.

2017 MULE PRO-DXT™ EPS DIESEL PARTS LIST

Frame Fittings(Rear)

ITEM NAME	PART NUMBER	QUANTITY
PLATE,LATCH (Ref # 13272)	13272-1828	2
COVER,RR FLOOR,FR (Ref # 14092)	14092-1186	1
COVER,SIDE,LH,RR (Ref # 14092A)	14092-1190	1
COVER,SIDE,RH,RR (Ref # 14092B)	14092-1191	1
COVER,FLOOR,BOTTOM (Ref # 14092C)	14092-1196	1
COVER,DUST (Ref # 14093)	14093-0296	1
COVER,A/C (Ref # 14093A)	14093-0366	1
COVER,RR SEAT (Ref # 14093B)	14093-0367	1
COVER,RR,FLOOR,MUD,LH (Ref # 14093C)	14093-0388	1
COVER,RR,FLOOR,MUD,RH (Ref # 14093D)	14093-0389	1
COVER,MAINTENANCE ROOM (Ref # 14093E)	14093-0492	1
INSULATOR,LH (Ref # 16073)	16073-0814	1
INSULATOR,RH (Ref # 16073A)	16073-0815	1
HOOK,STRIKER (Ref # 27012)	27012-0806	1
LATCH,A/C (Ref # 49031)	49031-0007	1
LATCH,TOGGLE (Ref # 49031A)	49031-0015	1
COLLAR,L=4.6 (Ref # 92027)	92027-1168	2
RIVET (Ref # 92039)	92039-0086	12
RIVET,3.2X13.4 (Ref # 92039A)	92039-0739	4
RIVET (Ref # 92039B)	92039-0747	4
RIVET (Ref # 92039C)	92039-0776	29
PLUG,36X20 (Ref # 92066)	92066-0812	2
DAMPER,6X10X15 (Ref # 92075)	92075-1808	2
DAMPER,RUBBER (Ref # 92075A)	92075-261	3
SEAL,DUST,20X20X565 (Ref # 92093)	92093-0631	1
SEAL,DUST,20X25X280 (Ref # 92093A)	92093-0633	1
SEAL,165X50X25 (Ref # 92093B)	92093-0642	1
SEAL,DUST,61X368X10 (Ref # 92093C)	92093-0643	1
SEAL,DUST,39X255X15 (Ref # 92093D)	92093-0644	1

© 2025 Kawasaki Motors Corp., U.S.A.

2017 MULE PRO-DXT™ EPS DIESEL PARTS LIST

Frame Fittings(Rear)

ITEM NAME	PART NUMBER	QUANTITY
SEAL,DUST,69X207X10 (Ref # 92093E)	92093-0645	1
SEAL,DUST,15X305X20 (Ref # 92093F)	92093-0646	1
SEAL,52X72X20 (Ref # 92093G)	92093-0651	1
SEAL,21.5X60X20 (Ref # 92093H)	92093-0652	1
SEAL,HARNESS (Ref # 92093I)	92093-0666	1
DAMPER,25X60X3.175 (Ref # 92161)	92161-1827	1
SCREW,6X16 (Ref # 92172)	92172-0236	2
SCREW,6X16 (Ref # 92172A)	92172-0711	20

© 2025 Kawasaki Motors Corp., U.S.A.