2017 MULE PRO-DXT™ EPS DIESEL PARTS DIAGRAM

Air Cleaner

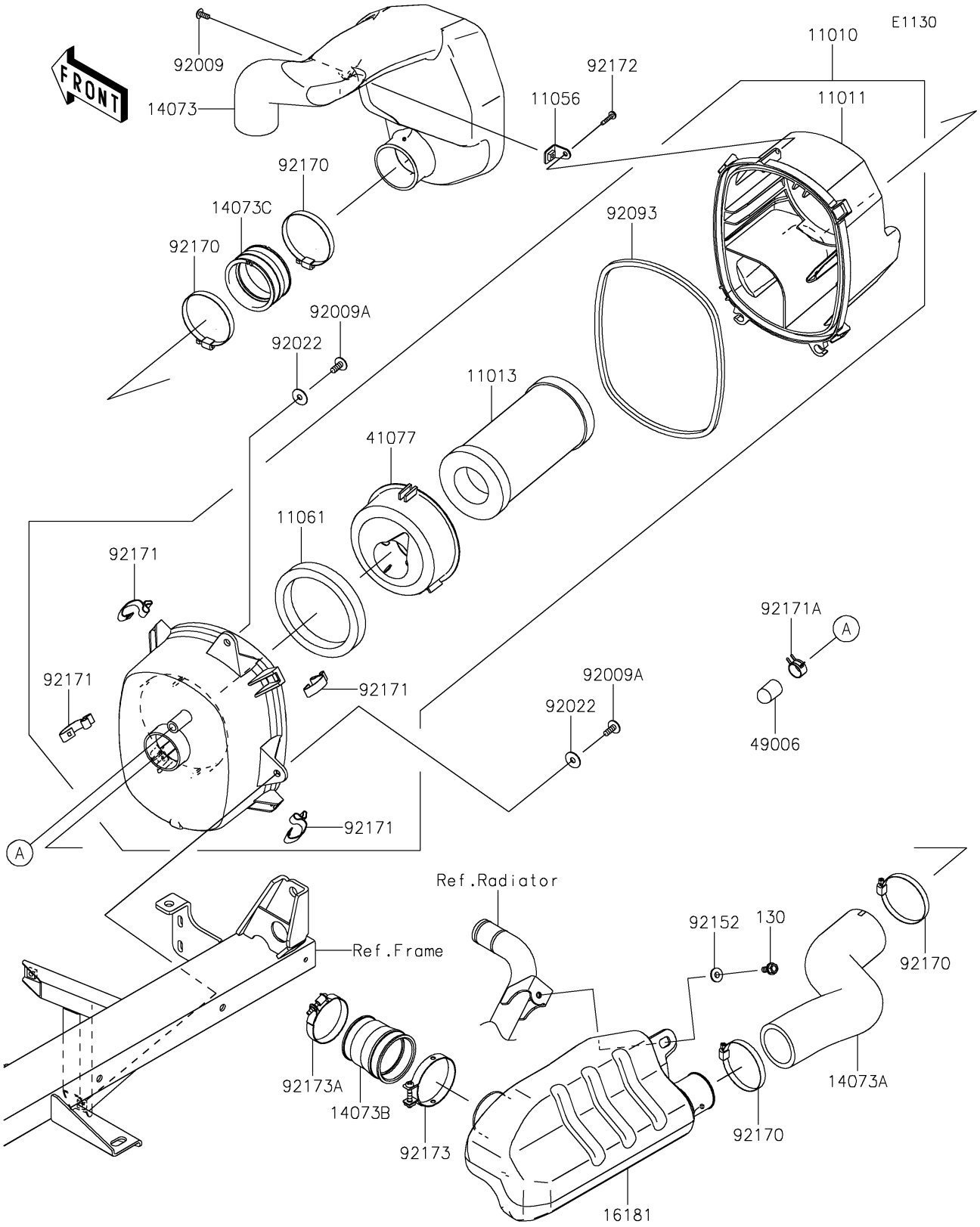

© 2025 Kawasaki Motors Corp., U.S.A.

2017 MULE PRO-DXT™ EPS DIESEL PARTS LIST

Air Cleaner

ITEM NAME	PART NUMBER	QUANTITY
FILTER-ASSY-AIR (Ref # 11010)	11010-0860	1
CASE-AIR FILTER,UPP (Ref # 11011)	11011-0857	1
ELEMENT-AIR FILTER (Ref # 11013)	11013-1290	1
BRACKET,AIR FILTER (Ref # 11056)	11056-3734	1
GASKET,ADAPTER (Ref # 11061)	11061-0961	1
BOLT-FLANGED,6X14 (Ref # 130)	130BA0614	1
DUCT,INTAKE (Ref # 14073)	14073-0815	1
DUCT,AIR CLEANER-RESONATOR (Ref # 14073A)	14073-0816	1
DUCT,FUNNEL (Ref # 14073B)	14073-0817	1
DUCT,JOINT (Ref # 14073C)	14073-1775	1
TANK-RESONATOR (Ref # 16181)	16181-0018	1
ADAPTER,ELEMENT (Ref # 41077)	41077-0719	1
BOOT (Ref # 49006)	49006-0555	1
SCREW,5X12 (Ref # 92009)	92009-1154	1
SCREW,6X16 (Ref # 92009A)	92009-1621	2
WASHER,PLAIN,6.5X20X1 (Ref # 92022)	92022-165	2
SEAL,AIR FILTER (Ref # 92093)	92093-0607	1
COLLAR,6.5X10X5.6 (Ref # 92152)	92152-0445	1
CLAMP (Ref # 92170)	92170-1764	4
CLAMP (Ref # 92171)	92171-0225	4
CLAMP (Ref # 92171A)	92171-0533	1
SCREW,TAPPING,5X20 (Ref # 92172)	92172-0009	1
CLAMP (Ref # 92173)	92173-1536	1
CLAMP (Ref # 92173A)	92173-1537	1

© 2025 Kawasaki Motors Corp., U.S.A.