# 2017 Mule PRO-FXT EPS PARTS DIAGRAM

## Shock Absorber(s)

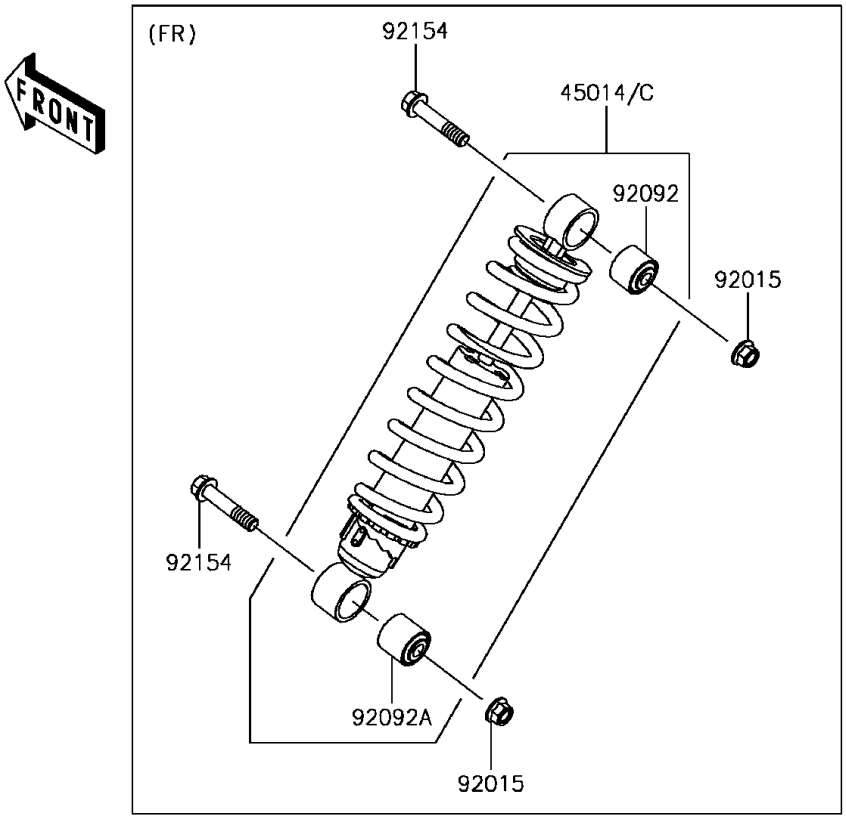


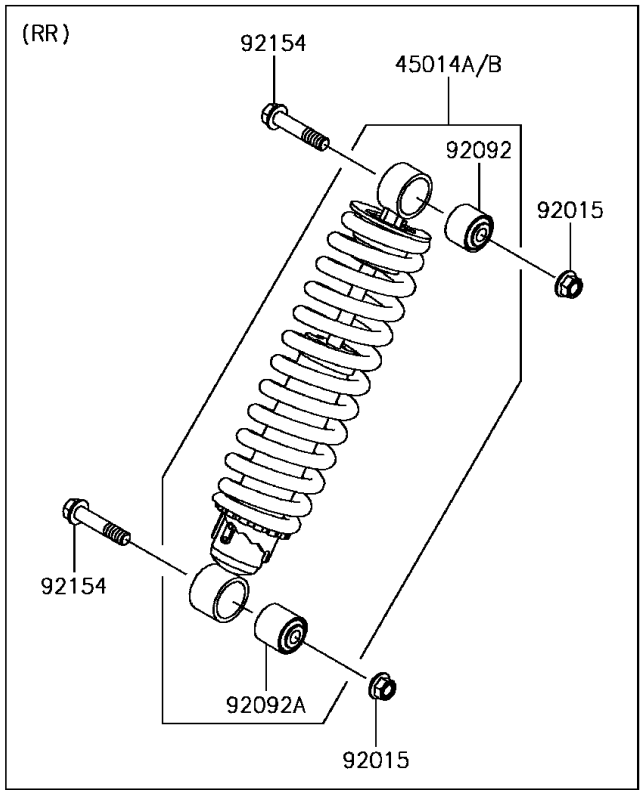


© 2024 Kawasaki Motors Corp., U.S.A.

# 2017 Mule PRO-FXT EPS PARTS LIST

## Shock Absorber(s)

| ITEM NAME | PART NUMBER | QUANTITY |
|---|---|---|
| SHOCKABSORBER,FR (Ref # 45014) | 45014-0536 | 2 |
| SHOCKABSORBER,RR (Ref # 45014A) | 45014-0537 | 2 |
| SHOCKABSORBER,RR (Ref # 45014B) | 45014-0538 | 2 |
| SHOCKABSORBER,FR (Ref # 45014C) | 45014-0558 | 2 |
| NUT,LOCK,FLANGED,12MM (Ref # 92015) | 92015-1433 | 8 |
| BUSHING-RUBBER,UPP (Ref # 92092) | 92092-0034 | 4 |
| BUSHING-RUBBER,LWR (Ref # 92092A) | 92092-0035 | 4 |
| BOLT,FLANGED,12X58 (Ref # 92154) | 92154-1319 | 8 |

© 2024 Kawasaki Motors Corp., U.S.A.