2020 Ninja® 650 KRT Edition PARTS DIAGRAM

Water Pipe

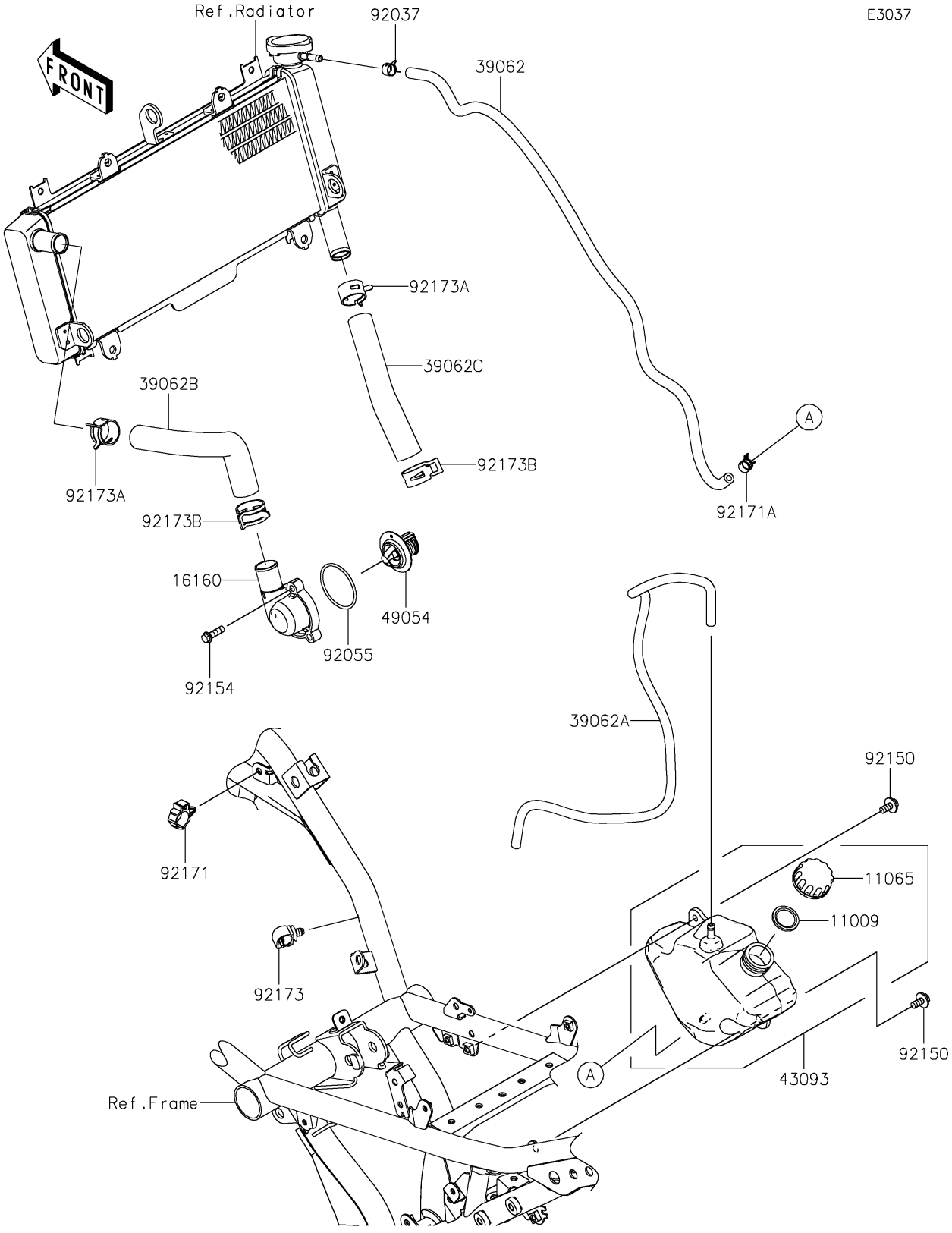

© 2024 Kawasaki Motors Corp., U.S.A.

2020 Ninja® 650 KRT Edition PARTS LIST

Water Pipe

ITEM NAME	PART NUMBER	QUANTITY
GASKET,RESERVOIR TANK CAP (Ref # 11009)	11009-1145	1
CAP (Ref # 11065)	11065-0962	1
BODY,THERMO (Ref # 16160)	16160-0793	1
HOSE-COOLING,RADI.-RESERVOIR (Ref # 39062)	39062-0745	1
HOSE-COOLING,BREATHER (Ref # 39062A)	39062-0746	1
HOSE-COOLING,HEAD-RADIATOR (Ref # 39062B)	39062-0747	1
HOSE-COOLING,RADIATOR-PUMP (Ref # 39062C)	39062-0748	1
RESERVOIR-ASSY-TANK (Ref # 43093)	43093-0003	1
THERMOSTAT (Ref # 49054)	49054-0001	1
CLAMP (Ref # 92037)	92037-2113	1
RING-O,44.7X2.4 (Ref # 92055)	92055-0160	1
BOLT,6X14 (Ref # 92150)	92150-1340	2
BOLT,FLANGED,6X20 (Ref # 92154)	92154-1778	3
CLAMP,BRAKE HOSE (Ref # 92171)	92171-0316	1
CLAMP,10.5X8X0.7 (Ref # 92171A)	92171-1992	1
CLAMP,12MM DIA. (Ref # 92173)	92173-0736	1
CLAMP (Ref # 92173A)	92173-1567	2
CLAMP (Ref # 92173B)	92173-1688	2

© 2024 Kawasaki Motors Corp., U.S.A.