1998 KX100 PARTS DIAGRAM

Footrests

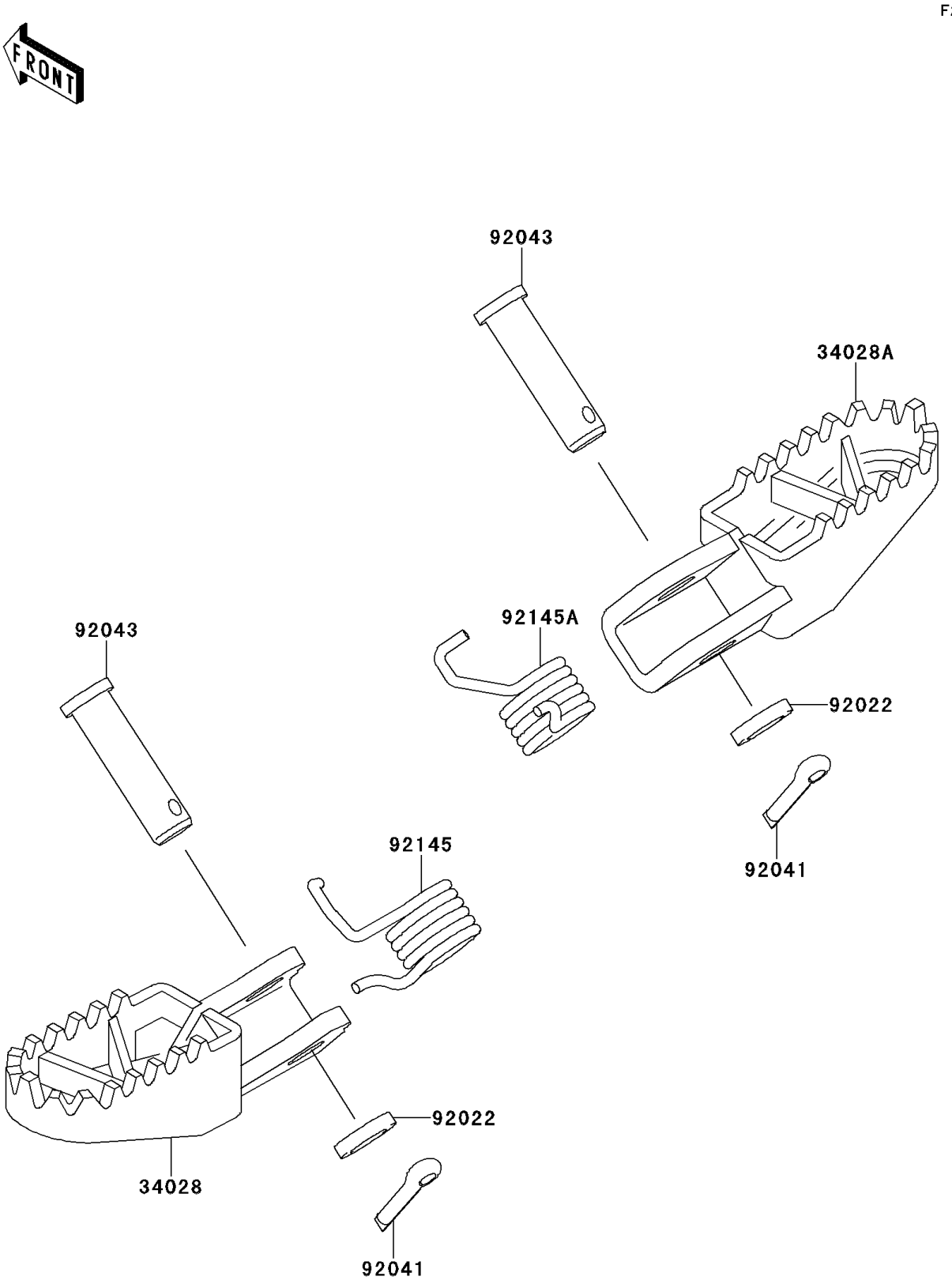

© 2024 Kawasaki Motors Corp., U.S.A.

1998 KX100 PARTS LIST

Footrests

ITEM NAME	PART NUMBER	QUANTITY
STEP,LH,SILVER (Ref # 34028)	34028-1448-CE	1
STEP,RH,SILVER (Ref # 34028A)	34028-1449-CE	1
WASHER,10.2X16X1 (Ref # 92022)	92022-1829	2
COTTER,2.5X15 (Ref # 92041)	92041-1051	2
PIN,10X37.5 (Ref # 92043)	92043-1570	2
SPRING,STEP,LH (Ref # 92145)	92145-1106	1
SPRING,STEP,RH (Ref # 92145A)	92145-1107	1

© 2024 Kawasaki Motors Corp., U.S.A.