2008 Brute Force 750 4x4i NRA Outdoors PARTS DIAGRAM

Throttle

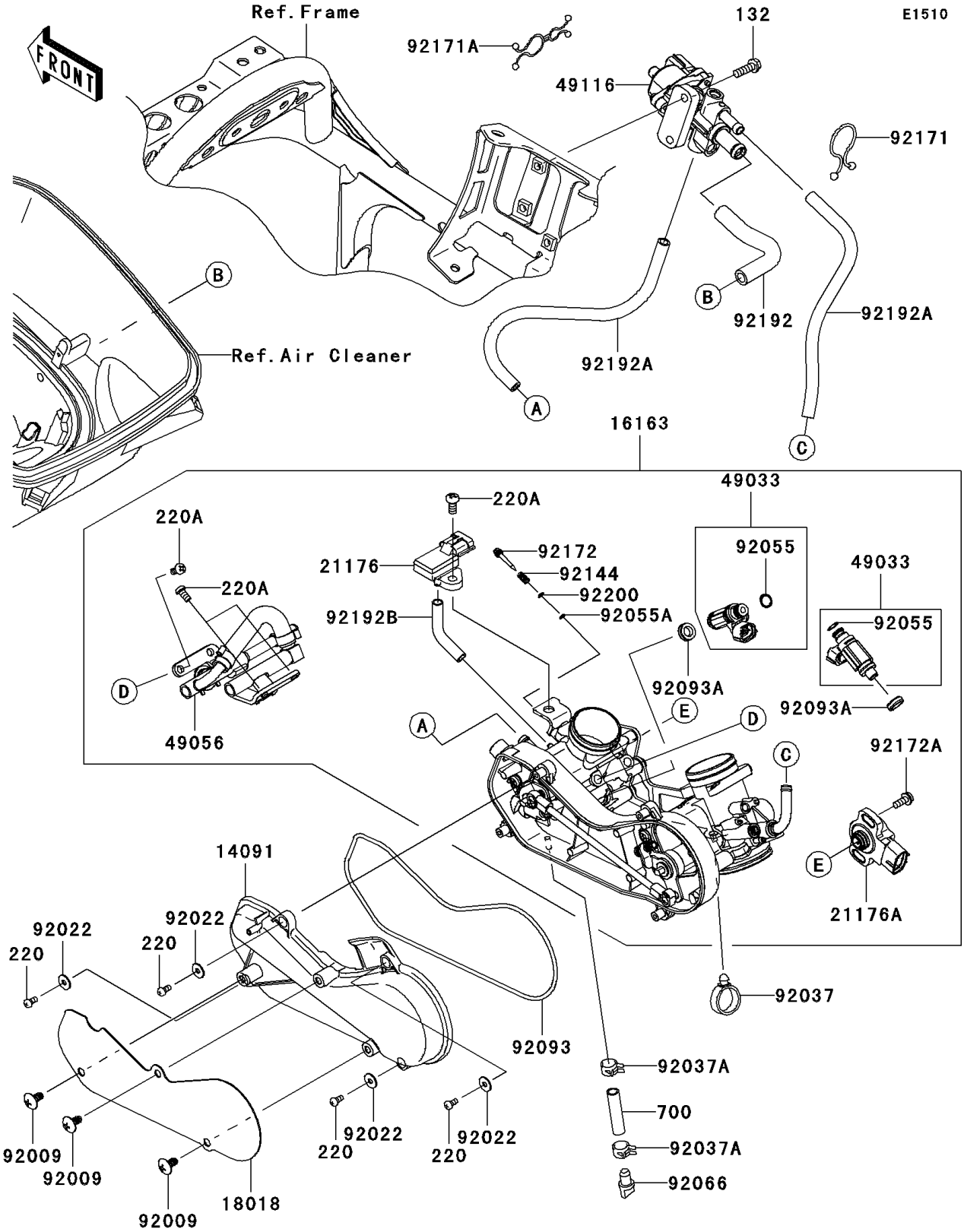

© 2026 Kawasaki Motors Corp., U.S.A.

2008 Brute Force 750 4x4i NRA Outdoors PARTS LIST

Throttle

ITEM NAME	PART NUMBER	QUANTITY
BOLT-FLANGED-SMALL,6X18 (Ref # 132)	132BD0618	2
SCREW-PAN-CROS,4X8 (Ref # 220)	220AA0408	4
SCREW-PAN-CROSS,6X12 (Ref # 220A)	220AA0612	5
TUBE-PVC (Ref # 700)	700Q0740	1
COVER (Ref # 14091)	14091-0737	1
THROTTLE-ASSY,36EIS (Ref # 16163)	16163-0125	1
PLATE-HEAT GUARD (Ref # 18018)	18018-0010	1
SENSOR,PRESSURE (Ref # 21176)	21176-0058	1
SENSOR,TPS (Ref # 21176A)	21176-0100	1
NOZZLE-INJECTION (Ref # 49033)	49033-1060	2
PIPE-INJECTION (Ref # 49056)	49056-0021	1
VALVE-ASSY (Ref # 49116)	49116-0021	1
SCREW,6X12 (Ref # 92009)	92009-1480	3
WASHER,5.2X13X1 (Ref # 92022)	92022-1380	4
CLAMP,HOSE (Ref # 92037)	92037-1827	1
CLAMP (Ref # 92037A)	92037-2113	2
RING-O,INJECTION NOZZLE (Ref # 92055)	92055-1622	2
RING-O,AIR SCREW (Ref # 92055A)	92055-1658	2
PLUG,DRAIN (Ref # 92066)	92066-1211	1
SEAL (Ref # 92093)	92093-0082	1
SEAL (Ref # 92093A)	92093-0127	2
SPRING,THROTTLE STOP SCREW (Ref # 92144)	92144-1674	2
CLAMP (Ref # 92171)	92171-1185	1
CLAMP (Ref # 92171A)	92171-1438	1
SCREW (Ref # 92172)	92172-0156	2
SCREW (Ref # 92172A)	92172-0254	2
TUBE (Ref # 92192)	92192-0437	1
TUBE (Ref # 92192A)	92192-0439	2
TUBE,3.2X7.4X50 (Ref # 92192B)	92192-0578	1

© 2026 Kawasaki Motors Corp., U.S.A.

2008 Brute Force 750 4x4i NRA Outdoors PARTS LIST

Throttle

ITEM NAME	PART NUMBER	QUANTITY
WASHER,PILOT AIR SCREW (Ref # 92200)	92200-1564	2

© 2026 Kawasaki Motors Corp., U.S.A.