2019 VERSYS®-X 300 PARTS DIAGRAM

Accessory(Pannier)

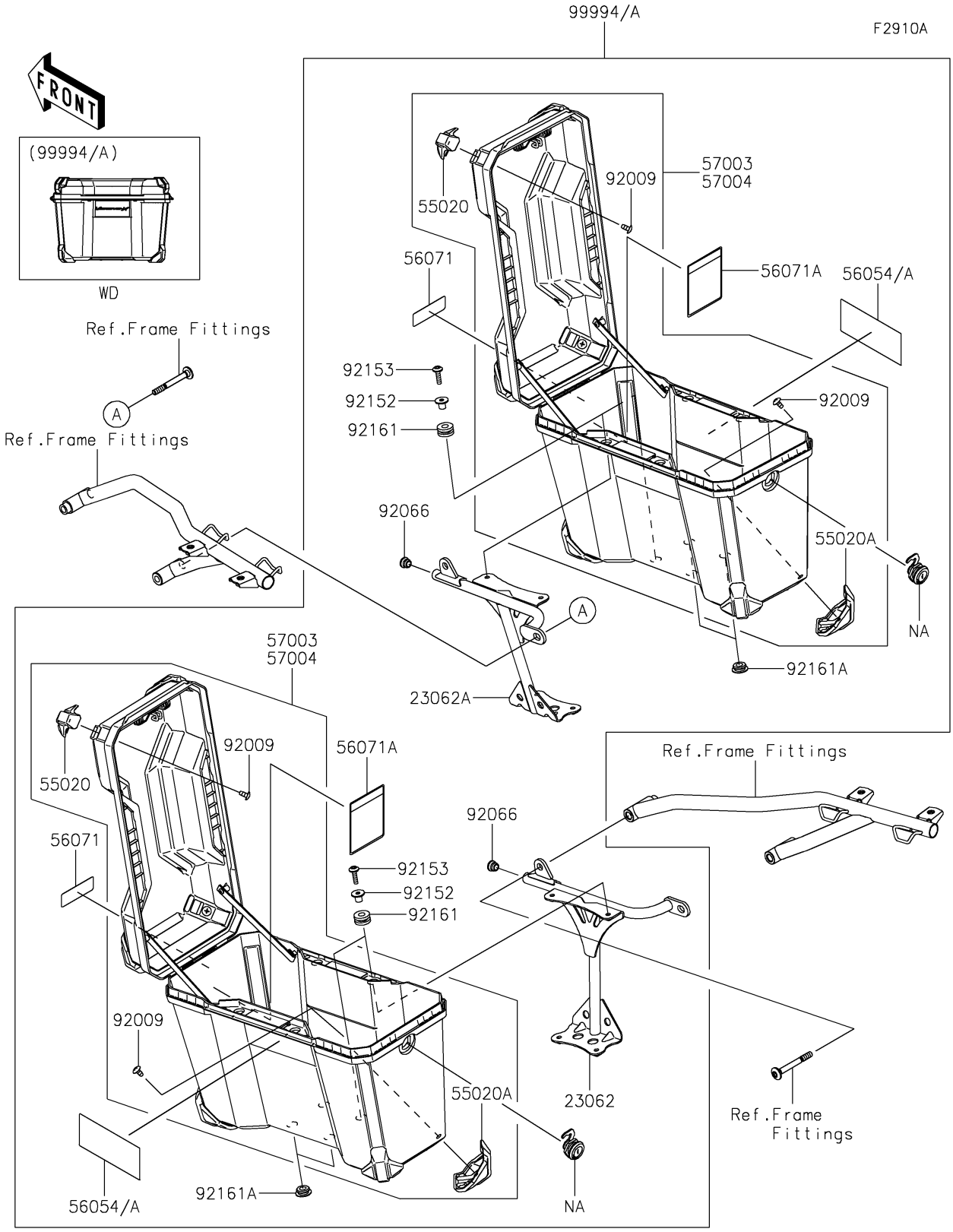

© 2026 Kawasaki Motors Corp., U.S.A.

2019 VERSYS®-X 300 PARTS LIST

Accessory(Pannier)

ITEM NAME	PART NUMBER	QUANTITY
BRACKET-COMP,LH (Ref # 23062)	23062-0965	1
BRACKET-COMP,RH (Ref # 23062A)	23062-0966	1
GUARD,UPP (Ref # 55020)	55020-2174	8
GUARD,LWR (Ref # 55020A)	55020-2175	8
MARK,BAG,VERSYS-X (Ref # 56054A)	56054-2335	2
LABEL-WARNING,PICTOGRAM (Ref # 56071)	56071-0457	2
LABEL-WARNING,PANNIER LOAD ETC (Ref # 56071A)	56071-0724	2
BAG-ASSY,PANNIER (Ref # 57004)	57004-0002	2
SCREW,6X12 (Ref # 92009)	92009-1480	16
PLUG (Ref # 92066)	92066-1184	2
COLLAR,6.5X10X13.1 (Ref # 92152)	92152-0332	8
BOLT,SOCKET,6X23 (Ref # 92153)	92153-1267	8
DAMPER,10X24X12 (Ref # 92161)	92161-0927	8
DAMPER,PANNIER BOTTOM (Ref # 92161A)	92161-1910	4
KIT-ACCESSORY,PANNIER (Ref # 99994A)	99994-1271	1

© 2026 Kawasaki Motors Corp., U.S.A.