2018 VULCAN® S PARTS DIAGRAM

Frame Fittings

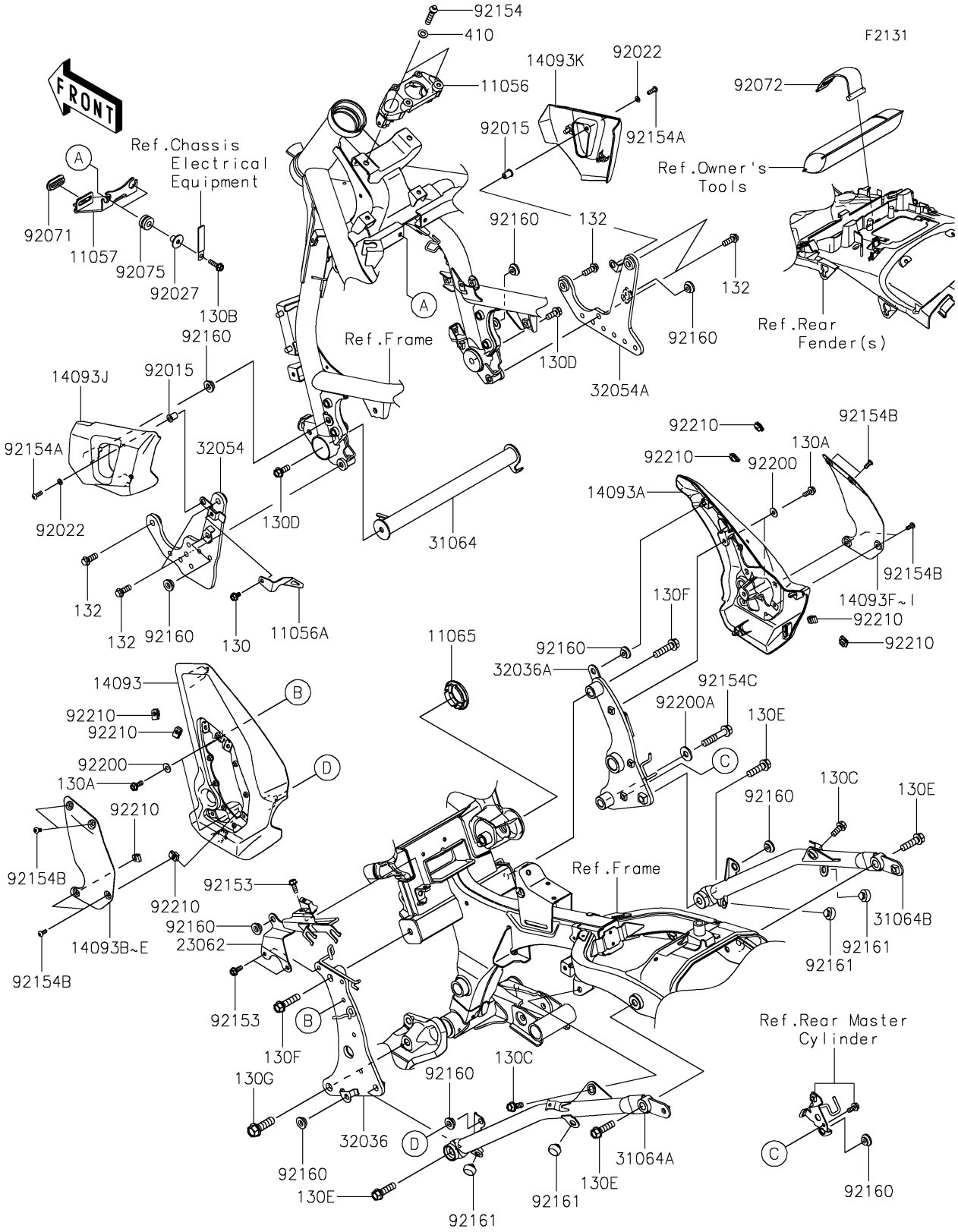

© 2024 Kawasaki Motors Corp., U.S.A.

2018 VULCAN® S PARTS LIST

Frame Fittings

ITEM NAME	PART NUMBER	QUANTITY
BRACKET,IGNITION SW. (Ref # 11056)	11056-0805	1
BRACKET,STEP STAY COVER,LH (Ref # 11056A)	11056-4456	1
BRACKET,REGULATOR (Ref # 11057)	11057-0177	1
CAP,SHOCK BKT.,F.S.BLACK (Ref # 11065)	11065-0868-18T	1
COVER,PIVOT,LH (Ref # 14093)	14093-0115	1
COVER,PIVOT,RH (Ref # 14093A)	14093-0116	1
COVER,PIVOT,PLATE,LH,EBONY (Ref # 14093E)	14093-0117-H8	1
COVER,PIVOT,PLATE,RH,EBONY (Ref # 14093I)	14093-0118-H8	1
COVER,STEP STAY,LH,F.S.BLACK (Ref # 14093J)	14093-0348-18T	1
COVER,STEP STAY,RH,F.S.BLACK (Ref # 14093K)	14093-0349-18T	1
BRACKET-COMP,SIDE COVER (Ref # 23062)	23062-0822	1
PIPE-COMP,FR FRAME (Ref # 31064)	31064-0649	1
PIPE-COMP,RR,LH,F.S.BLACK (Ref # 31064A)	31064-0652-18R	1
PIPE-COMP,RR,RH,F.S.BLACK (Ref # 31064B)	31064-0653-18R	1
BRACKET-SWINGARM,LH (Ref # 32036)	32036-0349	1
BRACKET-SWINGARM,RH (Ref # 32036A)	32036-0350	1
BRACKET-STEP,LH (Ref # 32054)	32054-0075	1
BRACKET-STEP,RH (Ref # 32054A)	32054-0076	1
NUT,WELL,5MM (Ref # 92015)	92015-1757	2
WASHER,5.1X10X1.0 (Ref # 92022)	92022-1977	2
COLLAR,L=13.1,BLACK (Ref # 92027)	92027-1450	2
GROMMET (Ref # 92071)	92071-0013	1
BAND,TOOL (Ref # 92072)	92072-0056	1
DAMPER (Ref # 92075)	92075-209	2
BOLT,FLANGED,6X16 (Ref # 92153)	92153-0713	3
BOLT,TORX,8X35 (Ref # 92154)	92154-0730	2
BOLT,SOCKET,5X16 (Ref # 92154A)	92154-1470	2
BOLT,SOCKET,5X12 (Ref # 92154B)	92154-1471	8
BOLT,FLANGED,10X50 (Ref # 92154C)	92154-1620	1

© 2024 Kawasaki Motors Corp., U.S.A.

2018 VULCAN® S PARTS LIST

Frame Fittings

ITEM NAME	PART NUMBER	QUANTITY
DAMPER (Ref # 92160)	92160-1613	10
DAMPER,10X20X8 (Ref # 92161)	92161-0855	4
WASHER,6.5X16X1.0 (Ref # 92200)	92200-0796	4
WASHER,10.2X25X2.3 (Ref # 92200A)	92200-1686	1
NUT,PLATE,5MM (Ref # 92210)	92210-0935	8
BOLT-FLANGED,6X10 (Ref # 130)	130BA0610	1
BOLT-FLANGED,6X16 (Ref # 130A)	130BA0616	4
BOLT-FLANGED,6X22 (Ref # 130B)	130BA0622	2
BOLT-FLANGED,8X20 (Ref # 130C)	130BA0820	2
BOLT-FLANGED,8X20 (Ref # 130D)	130CA0820	2
BOLT-FLANGED,10X35 (Ref # 130E)	130CA1035	4
BOLT-FLANGED,10X40 (Ref # 130F)	130CA1040	2
BOLT-FLANGED,12X40 (Ref # 130G)	130CB1240	1
BOLT-FLANGED-SMALL,8X22 (Ref # 132)	132BB0822	6
WASHER-PLAIN-SMALL,8MM (Ref # 410)	410AA0800	2

© 2024 Kawasaki Motors Corp., U.S.A.