2005 Prairie 700 4x4 Hardwoods Green HD PARTS DIAGRAM

Camshaft(s)/Tensioner(B2)

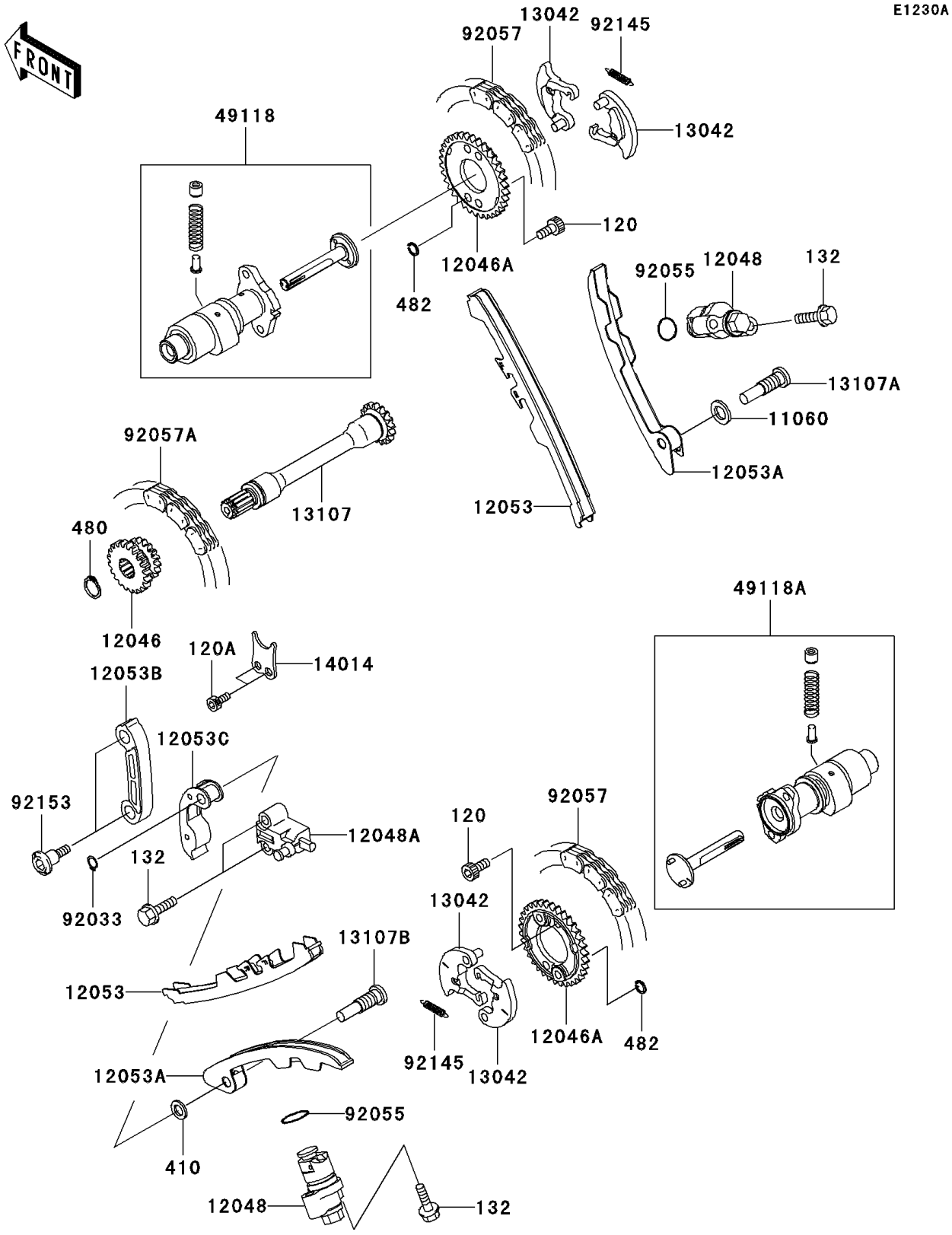

© 2024 Kawasaki Motors Corp., U.S.A.

2005 Prairie 700 4x4 Hardwoods Green HD PARTS LIST

Camshaft(s)/Tensioner(B2)

ITEM NAME	PART NUMBER	QUANTITY
BOLT-SOCKET,6X10 (Ref # 120)	120P0610	4
BOLT-SOCKET,6X14 (Ref # 120A)	120S0614	2
BOLT-FLANGED-SMALL,6X30 (Ref # 132)	132Y0630	6
WASHER-PLAIN-SMALL,8MM (Ref # 410)	410B0800	1
CIRCLIP-TYPE-C,14MM (Ref # 480)	480J1400	1
CIRCLIP-TYPE-E (Ref # 482)	482J5000	4
GASKET (Ref # 11060)	11060-1966	1
SPROCKET,21T&17T (Ref # 12046)	12046-0021	1
SPROCKET,CAMSHAFT,34T (Ref # 12046A)	12046-1203	2
TENSIONER-ASSY,CAM (Ref # 12048)	12048-1176	2
TENSIONER-ASSY,SECONDARY (Ref # 12048A)	12048-1177	1
GUIDE-CHAIN,CAMSHAFT,TENSION (Ref # 12053)	12053-1441	2
GUIDE-CHAIN,CAMSHAFT,SLACK (Ref # 12053A)	12053-1442	2
GUIDE-CHAIN,TENSION (Ref # 12053B)	12053-1443	1
GUIDE-CHAIN,SLACK (Ref # 12053C)	12053-1444	1
WEIGHT,DECOMP (Ref # 13042)	13042-1141	4
SHAFT (Ref # 13107)	13107-0029	1
SHAFT,CHAIN GUIDE,FR (Ref # 13107A)	13107-1443	1
SHAFT,CHAIN GUIDE,RR (Ref # 13107B)	13107-1444	1
PLATE-POSITION,DRIVE (Ref # 14014)	14014-1148	1
CAMSHAFT-COMP,FR (Ref # 49118)	49118-1193	1
CAMSHAFT-COMP,RR (Ref # 49118A)	49118-1194	1
RING-SNAP,8MM (Ref # 92033)	92033-1039	1
RING-O,18.8X1.9 (Ref # 92055)	92055-086	2
CHAIN,CAM SHAFT (Ref # 92057)	92057-1487	2
CHAIN,SECONDARY SHAFT (Ref # 92057A)	92057-1488	1
SPRING,DECOMP (Ref # 92145)	92145-1303	2
BOLT,SOCKET,6X24.5 (Ref # 92153)	92153-1200	2

© 2024 Kawasaki Motors Corp., U.S.A.