2006 Vulcan 500 LTD PARTS DIAGRAM

Breather Cover/Oil Pan

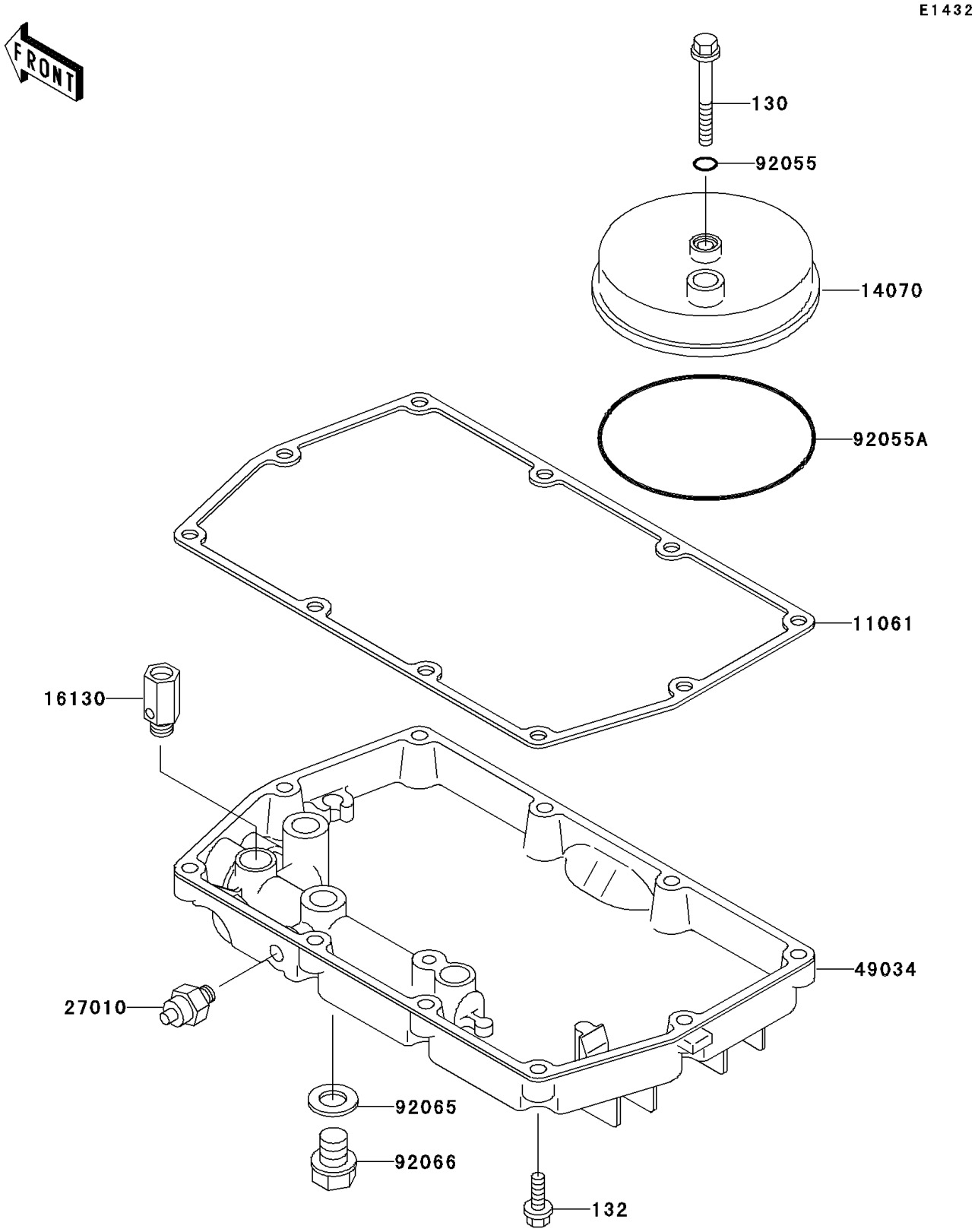

© 2024 Kawasaki Motors Corp., U.S.A.

2006 Vulcan 500 LTD PARTS LIST

Breather Cover/Oil Pan

ITEM NAME	PART NUMBER	QUANTITY
BOLT-FLANGED,6X45 (Ref # 130)	130BD0645	1
BOLT-FLANGED-SMALL,6X25 (Ref # 132)	132BD0625	10
GASKET,OIL PAN (Ref # 11061)	11061-0275	1
BODY-BREATHER (Ref # 14070)	14070-1082	1
VALVE-ASSY-RELIEF (Ref # 16130)	16130-1001	1
SWITCH,OIL PRESSURE (Ref # 27010)	27010-1313	1
PAN-OIL (Ref # 49034)	49034-1108	1
RING-O,6MM (Ref # 92055)	92055-1089	1
RING-O,92X1.9 (Ref # 92055A)	92055-1284	1
GASKET,12X22X2 (Ref # 92065)	92065-097	1
PLUG,OIL DRAIN,12X15 (Ref # 92066)	92066-1174	1

© 2024 Kawasaki Motors Corp., U.S.A.