2004 Prairie 700 4x4 PARTS DIAGRAM

Guard(s)

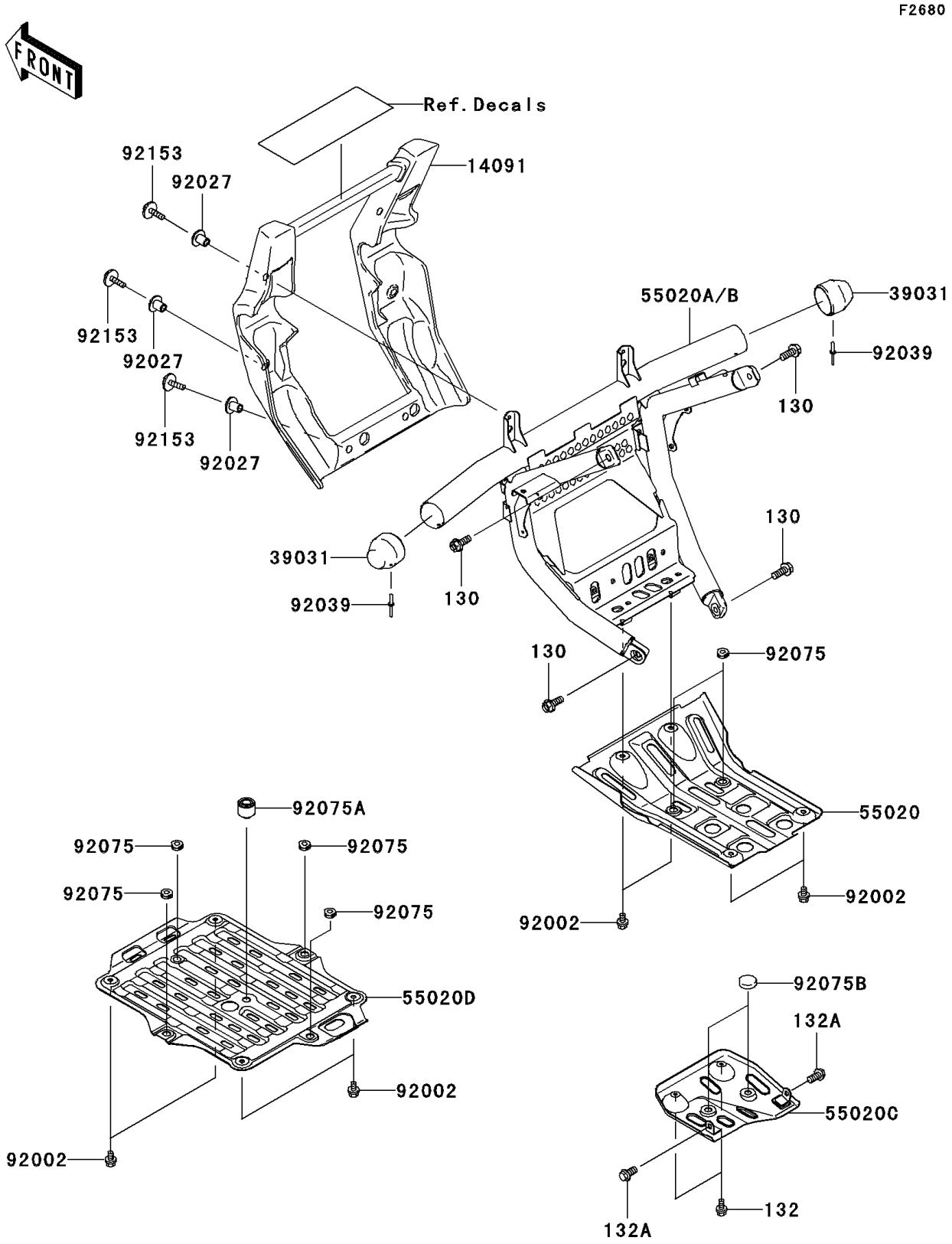

© 2024 Kawasaki Motors Corp., U.S.A.

2004 Prairie 700 4x4 PARTS LIST

Guard(s)

ITEM NAME	PART NUMBER	QUANTITY
BOLT-FLANGED,8X20 (Ref # 130)	130T0820	4
BOLT-FLANGED-SMALL,6X12 (Ref # 132)	132J0612	2
BOLT-FLANGED-SMALL,8X16 (Ref # 132A)	132J0816	2
COVER,FRONT GUARD,F.BLACK (Ref # 14091)	14091-0123-6Z	1
CAP-END,GUARD PIPE (Ref # 39031)	39031-0001	2
GUARD,FRONT SKID (Ref # 55020)	55020-0001	1
GUARD,FR,S.GOLD (Ref # 55020A)	55020-0015-UF	1
GUARD,SWING ARM (Ref # 55020C)	55020-1756	1
GUARD,ENGINE,UNDER (Ref # 55020D)	55020-1808	1
BOLT,6X10 (Ref # 92002)	92002-1449	8
COLLAR,L=14.1 (Ref # 92027)	92027-1920	6
RIVET (Ref # 92039)	92039-1150	2
DAMPER (Ref # 92075)	92075-051	6
DAMPER (Ref # 92075A)	92075-1002	1
DAMPER (Ref # 92075B)	92075-157	2
BOLT,SOCKET,6X22 (Ref # 92153)	92153-0665	6

© 2024 Kawasaki Motors Corp., U.S.A.