2007 Brute Force 650 4x4i Hardwoods Green HD PARTS DIAGRAM

Rear Hub

F2240

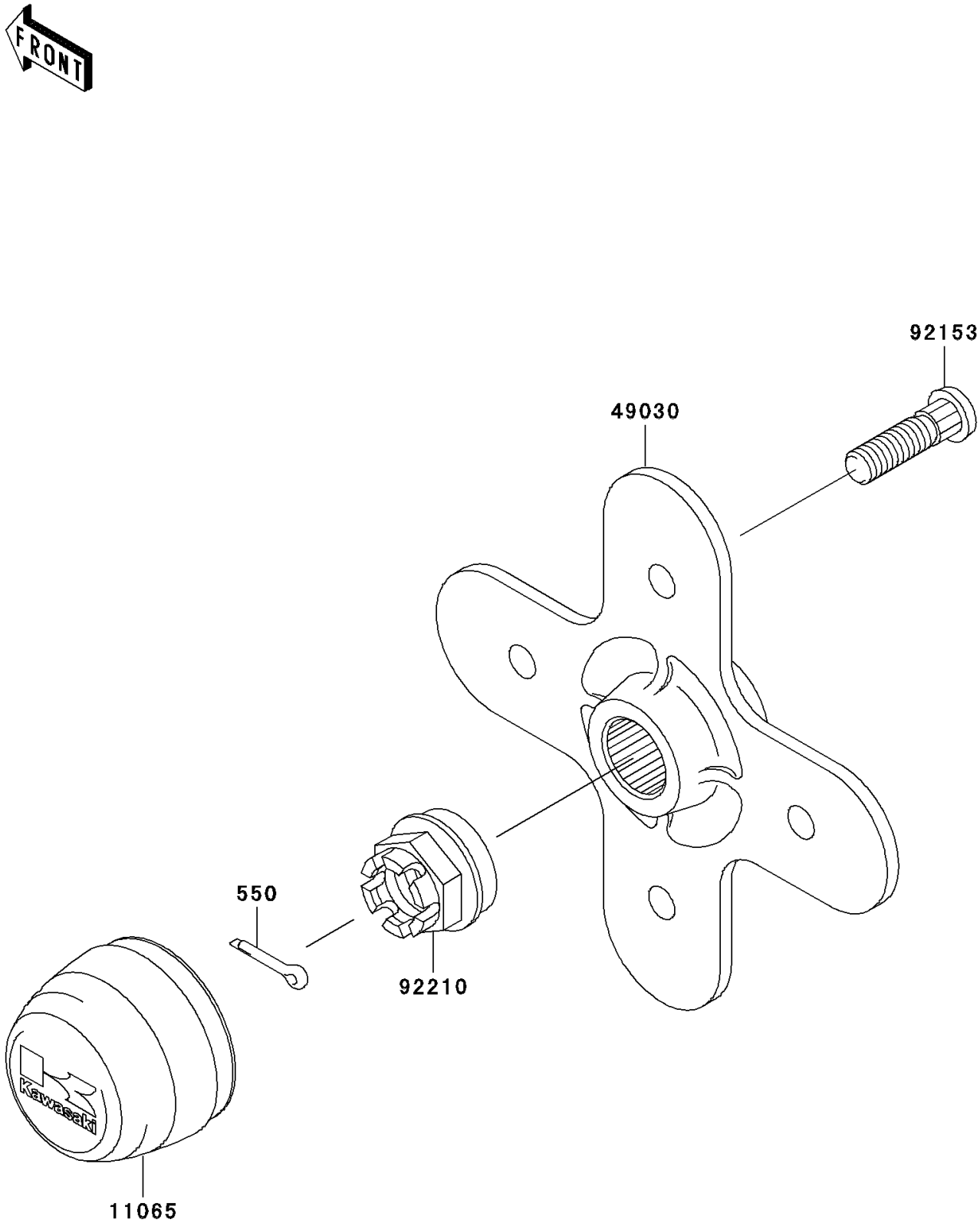

© 2024 Kawasaki Motors Corp., U.S.A.

2007 Brute Force 650 4x4i Hardwoods Green HD PARTS LIST

Rear Hub

ITEM NAME	PART NUMBER	QUANTITY
PIN-COTTER,4.0X25 (Ref # 550)	550AA4025	2
CAP,WHEEL (Ref # 11065)	11065-0108	2
HUB,RR (Ref # 49030)	49030-0009	2
BOLT,10X36.5 (Ref # 92153)	92153-0890	8
NUT,CASTLE,20MM (Ref # 92210)	92210-1381	2

© 2024 Kawasaki Motors Corp., U.S.A.