2010 KLX140 (CANADA ONLY) PARTS DIAGRAM

Reflectors(A8F/A9F/AAF/ABF)(CN)

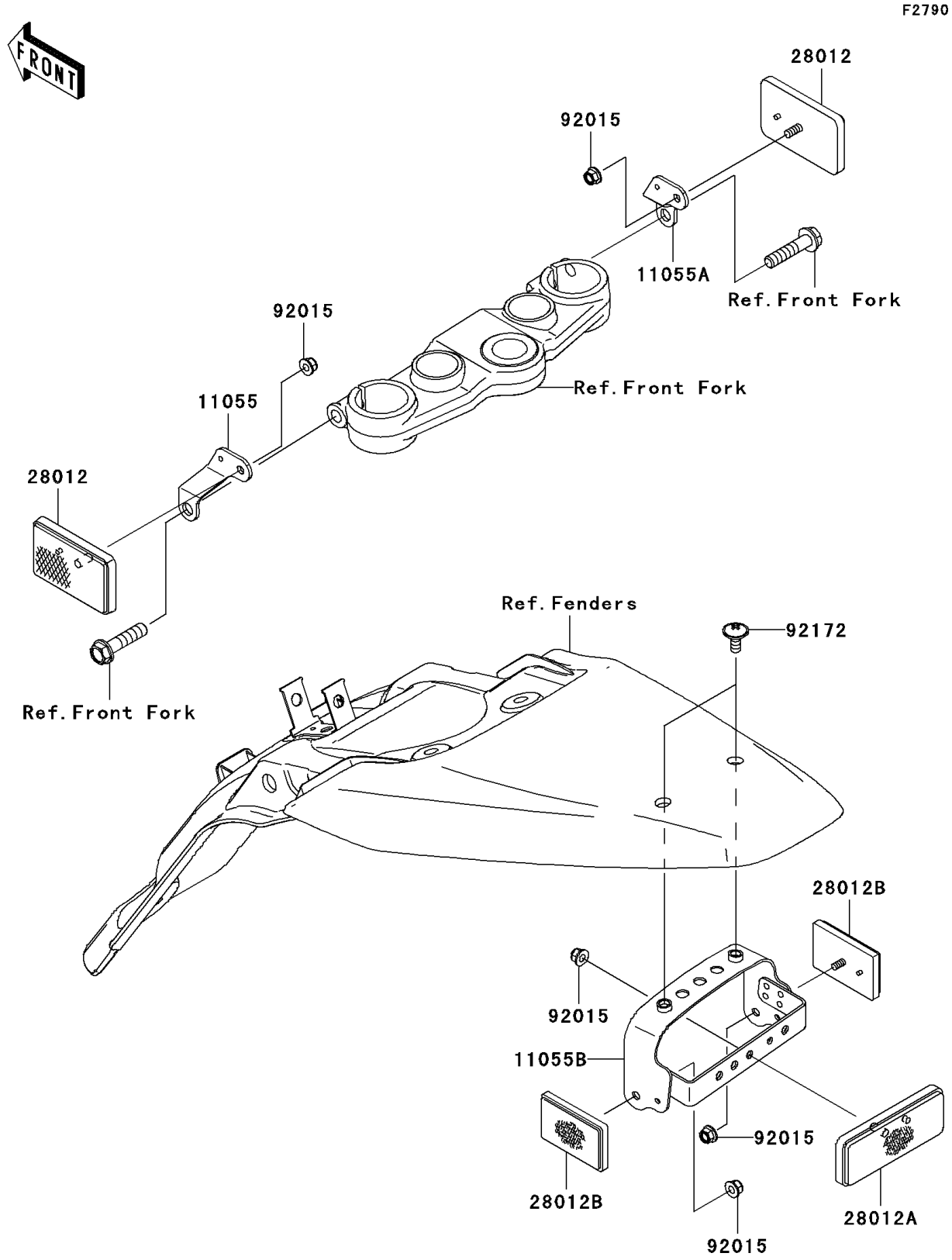

© 2024 Kawasaki Motors Corp., U.S.A.

2010 KLX140 (CANADA ONLY) PARTS LIST

Reflectors(A8F/A9F/AAF/ABF)(CN)

ITEM NAME	PART NUMBER	QUANTITY
BRACKET,REFLECTOR,FR,LH (Ref # 11055)	11055-0469	1
BRACKET,REFLECTOR,FR,RH (Ref # 11055A)	11055-0470	1
BRACKET,REFLECTOR,RR (Ref # 11055B)	11055-0770	1
REFLECTOR-REFLEX (Ref # 28012)	28012-1003	2
REFLECTOR-REFLEX (Ref # 28012A)	28012-1077	1
REFLECTOR-REFLEX (Ref # 28012B)	28012-1088	2
NUT,LOCK,FLANGED,5MM (Ref # 92015)	92015-1752	5
SCREW,6X14 (Ref # 92172)	92172-0401	2

© 2024 Kawasaki Motors Corp., U.S.A.