2018 VERSYS® 650 ABS PARTS DIAGRAM

Cables

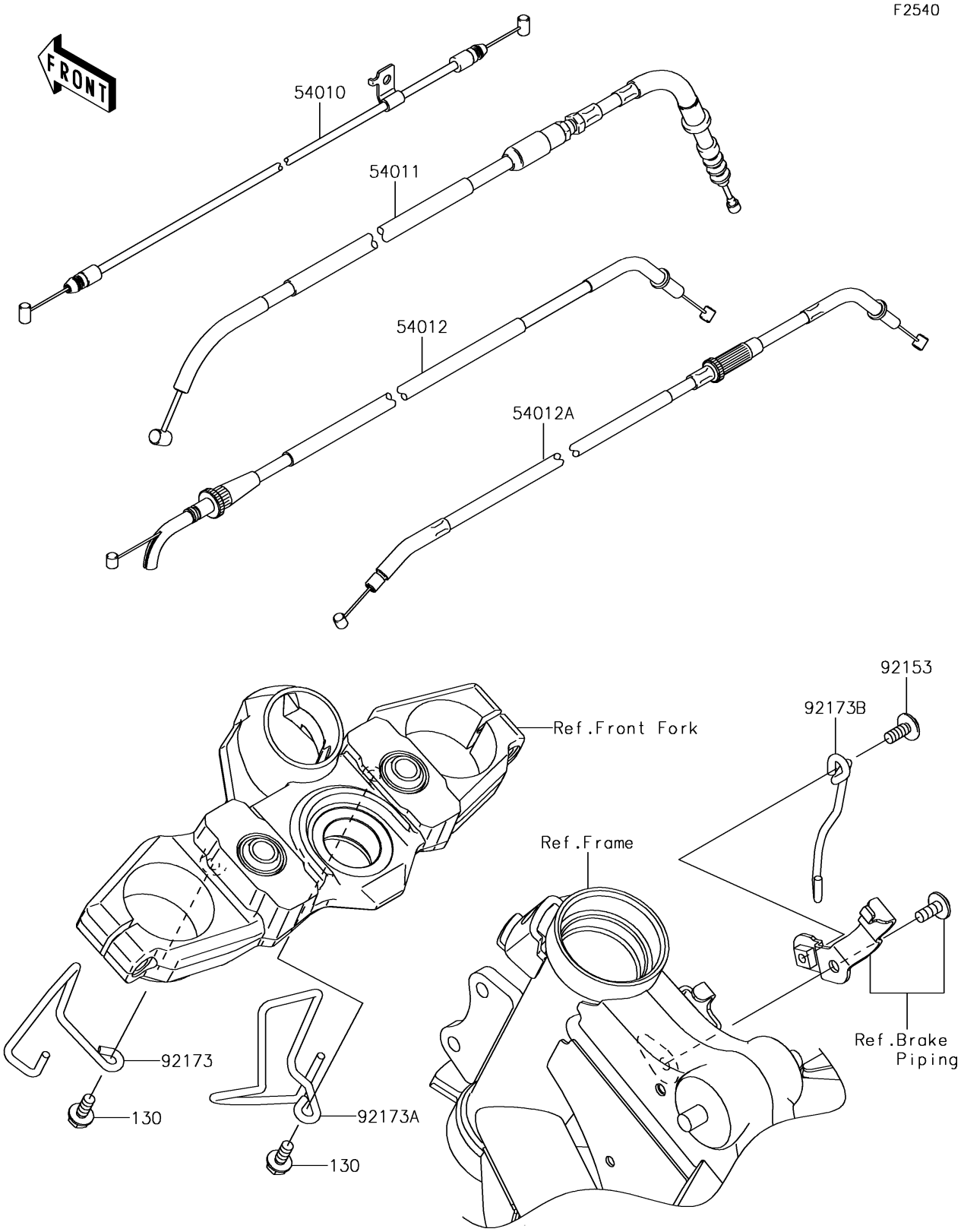

© 2024 Kawasaki Motors Corp., U.S.A.

2018 VERSYS® 650 ABS PARTS LIST

Cables

ITEM NAME	PART NUMBER	QUANTITY
BOLT-FLANGED,6X14 (Ref # 130)	130BA0614	2
CABLE,SEAT LOCK (Ref # 54010)	54010-0602	1
CABLE-CLUTCH (Ref # 54011)	54011-0603	1
CABLE-THROTTLE,OPENING (Ref # 54012)	54012-0300	1
CABLE-THROTTLE,CLOSING (Ref # 54012A)	54012-0301	1
BOLT,SOCKET,6X14 (Ref # 92153)	92153-1446	1
CLAMP,UPP BRACKET,LH (Ref # 92173)	92173-1292	1
CLAMP,UPP BRACKET,RH (Ref # 92173A)	92173-1293	1
CLAMP,HEAD PIPE (Ref # 92173B)	92173-1352	1

© 2024 Kawasaki Motors Corp., U.S.A.