2018 KLX®140 PARTS DIAGRAM

Seat

F2510

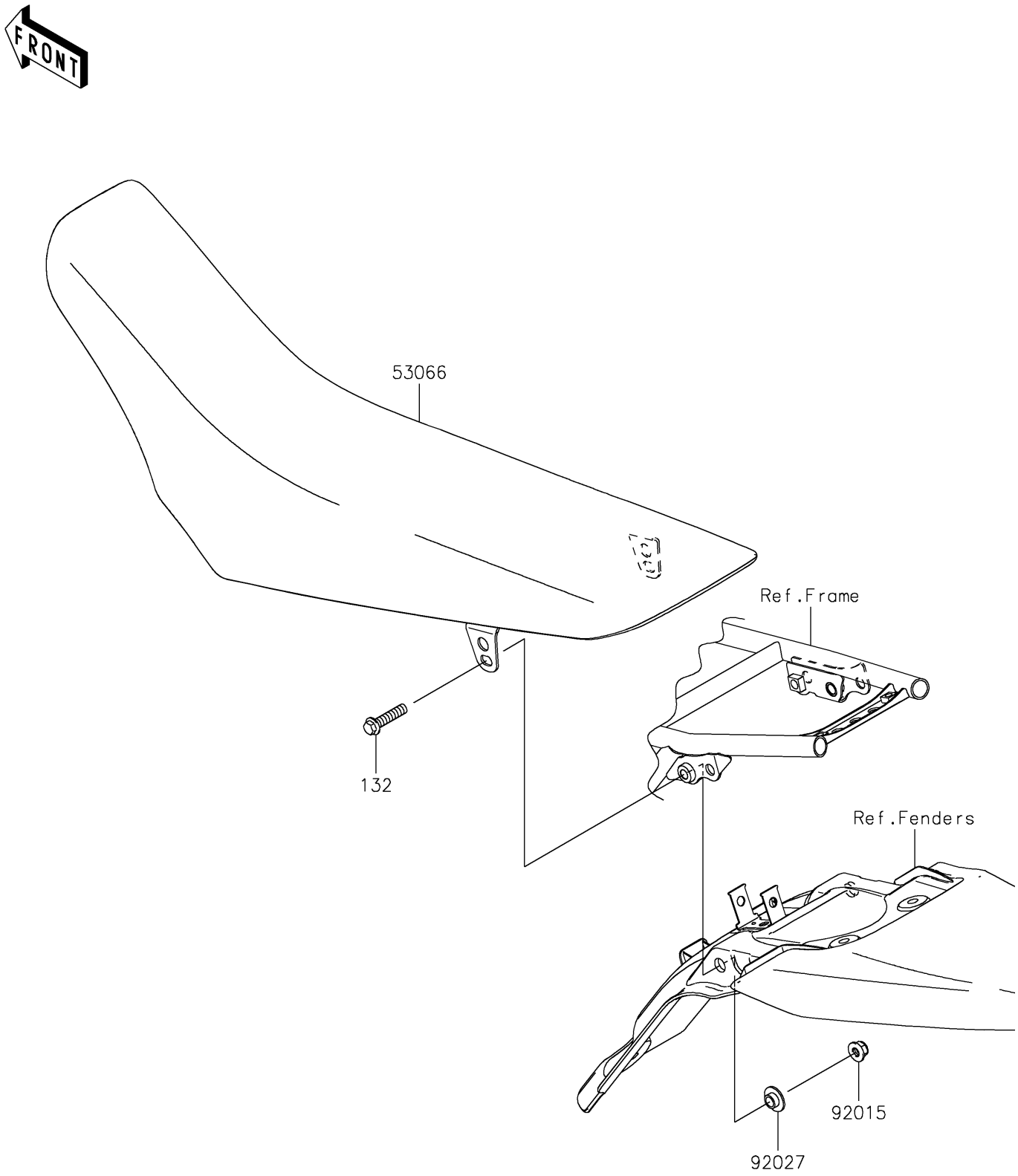

© 2024 Kawasaki Motors Corp., U.S.A.

2018 KLX®140 PARTS LIST

Seat

ITEM NAME	PART NUMBER	QUANTITY
BOLT-FLANGED-SMALL,8X35 (Ref # 132)	132BA0835	2
SEAT-ASSY,DUAL,GREEN/BLACK (Ref # 53066)	53066-0457-49F	1
NUT,8MM (Ref # 92015)	92015-1432	2
COLLAR (Ref # 92027)	92027-1745	2

© 2024 Kawasaki Motors Corp., U.S.A.