2020 KLX®140 PARTS DIAGRAM

Front Hub

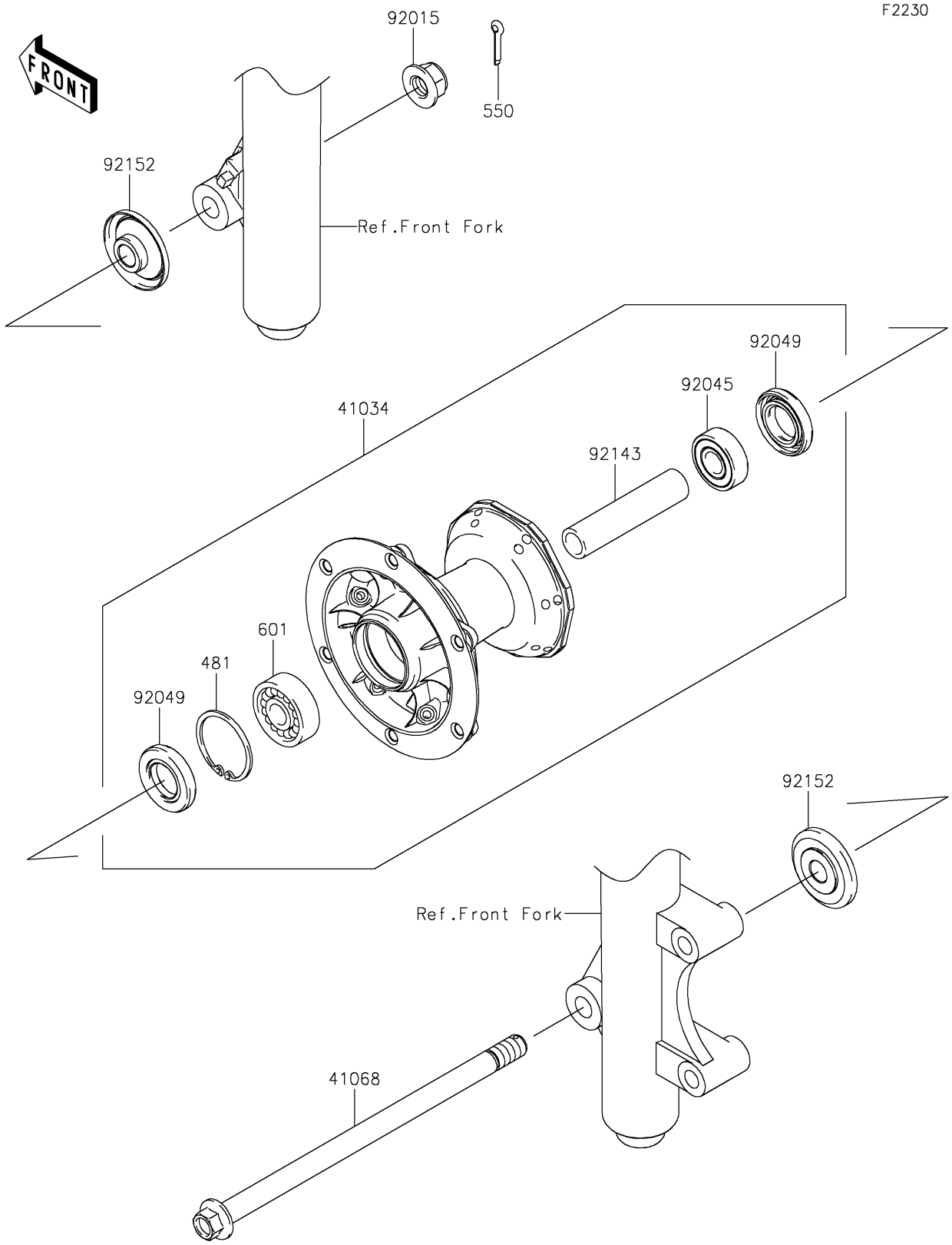

© 2024 Kawasaki Motors Corp., U.S.A.

2020 KLX®140 PARTS LIST

Front Hub

ITEM NAME	PART NUMBER	QUANTITY
DRUM-ASSY,FRONT BRAKE (Ref # 41034)	41034-0055	1
AXLE,FR (Ref # 41068)	41068-1333	1
CIRCLIP-TYPE-C,37MM (Ref # 481)	481J3700	1
PIN-COTTER,2.5X20 (Ref # 550)	550AA2520	1
BEARING-BALL,#6201UUC3 (Ref # 601)	601B6301UU	1
NUT,LOCK,FLANGED,12MM (Ref # 92015)	92015-1433	1
BEARING-BALL,TMB201LLUC3/2A (Ref # 92045)	92045-1062	1
SEAL-OIL,20X37X6.5 (Ref # 92049)	92049-0113	2
COLLAR,FR BRAKE DRUM,L=76 (Ref # 92143)	92143-1935	1
COLLAR,FR AXLE,L=12 (Ref # 92152)	92152-0653	2

© 2024 Kawasaki Motors Corp., U.S.A.