2016 BRUTE FORCE® 750 4x4i EPS PARTS DIAGRAM

Handlebar

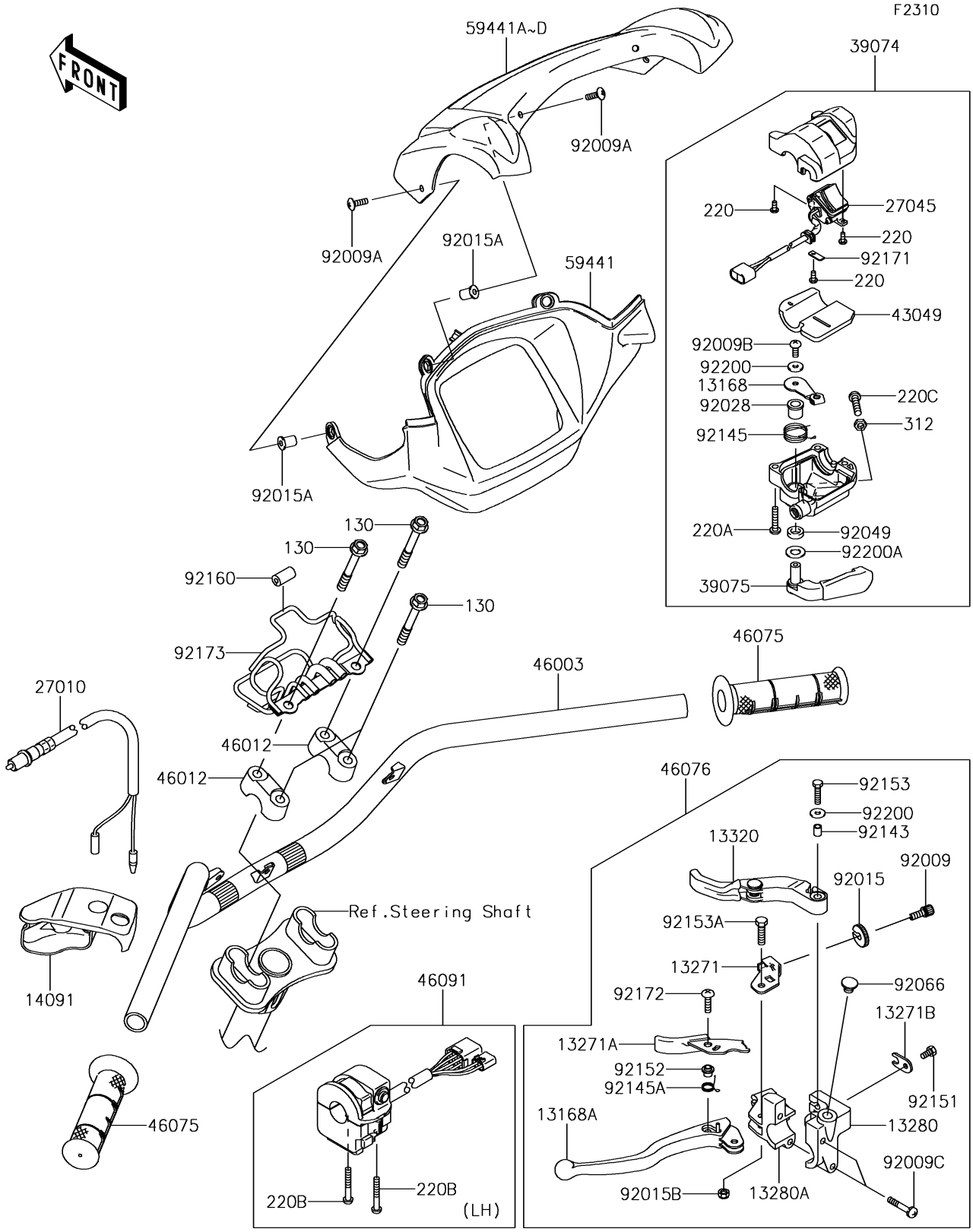

© 2024 Kawasaki Motors Corp., U.S.A.

2016 BRUTE FORCE® 750 4x4i EPS PARTS LIST

Handlebar

ITEM NAME	PART NUMBER	QUANTITY
LEVER (Ref # 13168)	13168-1715	1
LEVER,LH (Ref # 13168A)	13168-1736	1
PLATE,LOCK (Ref # 13271)	13271-1259	1
PLATE,LEVER LOCK (Ref # 13271A)	13271-1635	1
PLATE,WIRE OUTER STOPPER (Ref # 13271B)	13271-1636	1
HOLDER,DIFF LOCK LEVER (Ref # 13280)	13280-1226	1
HOLDER,LEVER,LH (Ref # 13280A)	13280-1227	1
LEVER-ASSY,DIFF LOCK (Ref # 13320)	13320-1018	1
COVER,DIFF LOCK LEVER (Ref # 14091)	14091-1403	1
SWITCH,BRAKE (Ref # 27010)	27010-1294	1
SWITCH-ASSY (Ref # 27045)	27045-0010	1
LEVER-ASSY-THROTTLE (Ref # 39074)	39074-0002	1
LEVER-THROTTLE (Ref # 39075)	39075-1062	1
PACKING (Ref # 43049)	43049-1088	1
HANDLE (Ref # 46003)	46003-1580	1
HOLDER-HANDLE (Ref # 46012)	46012-1168	2
GRIP (Ref # 46075)	46075-0065	2
LEVER-ASSY-GRIP,DIFF LOCK (Ref # 46076)	46076-1238	1
HOUSING-ASSY-CONTROL (Ref # 46091)	46091-0243	1
COVER-HANDLE,RR,F.BLACK (Ref # 59441)	59441-0006-6Z	1
COVER-HANDLE,FR,C.L.GREEN (Ref # 59441C)	59441-0015-57A	1
SCREW,CABLE ADJUST,8MM (Ref # 92009)	92009-1435	1
SCREW,5X16,BLACK (Ref # 92009A)	92009-1654	4
SCREW (Ref # 92009B)	92009-1959	1
SCREW,6X30 (Ref # 92009C)	92009-1961	2
NUT,CABLE ADJUST LOCK,8MM (Ref # 92015)	92015-1596	1
NUT,WELL,5MM (Ref # 92015A)	92015-1757	4
NUT (Ref # 92015B)	92015-1829	1
BUSHING (Ref # 92028)	92028-1986	1

© 2024 Kawasaki Motors Corp., U.S.A.

2016 BRUTE FORCE® 750 4x4i EPS PARTS LIST

Handlebar

ITEM NAME	PART NUMBER	QUANTITY
SEAL-OIL (Ref # 92049)	92049-1578	1
PLUG,9.5X8,POLYETHYLENE (Ref # 92066)	92066-1077	1
COLLAR (Ref # 92143)	92143-1216	1
SPRING (Ref # 92145)	92145-1392	1
SPRING (Ref # 92145A)	92145-1429	1
BOLT,5X10 (Ref # 92151)	92151-1975	1
COLLAR (Ref # 92152)	92152-1176	1
BOLT,5X20 (Ref # 92153)	92153-1129	1
BOLT-FLANGED,8X60 (Ref # 130)	130CA0860	4
SCREW-PAN-CROS,3X8 (Ref # 220)	220AA0308	3
SCREW-PAN-CROS,5X25 (Ref # 220A)	220AB0525	3
SCREW-PAN-CROS,5X35 (Ref # 220B)	220AB0535	2
SCREW-PAN-CROS,6X25 (Ref # 220C)	220AB0625	1
NUT-HEX,6MM,BLACK (Ref # 312)	312AB0600	1
BOLT (Ref # 92153A)	92153-1919	1
DAMPER,4.5X11X20 (Ref # 92160)	92160-1074	1
CLAMP (Ref # 92171)	92171-1344	1
SCREW,5X20 (Ref # 92172)	92172-0078	1
CLAMP (Ref # 92173)	92173-0741	1
WASHER (Ref # 92200)	92200-1558	2
WASHER (Ref # 92200A)	92200-1559	1

© 2024 Kawasaki Motors Corp., U.S.A.