2017 KX™100 PARTS DIAGRAM

Owner's Tools

F2810

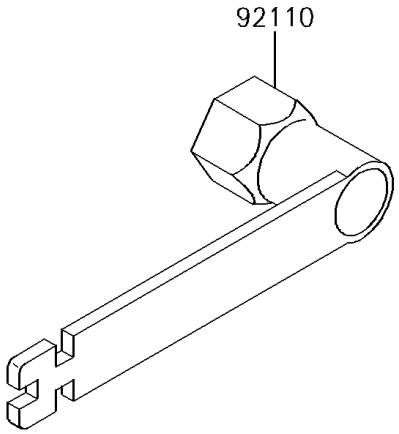

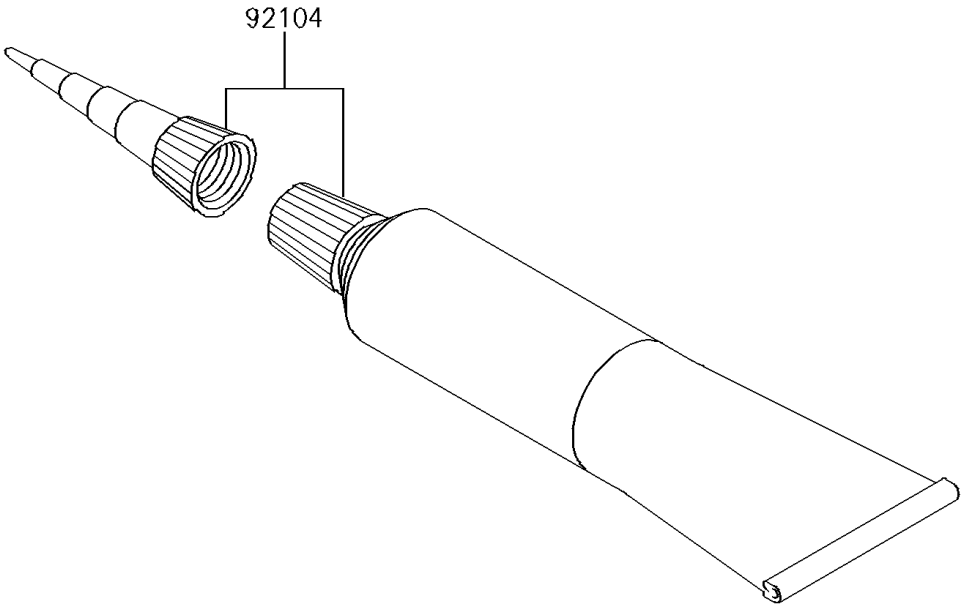

© 2025 Kawasaki Motors Corp., U.S.A.

2017 KX™100 PARTS LIST

Owner's Tools

ITEM NAME	PART NUMBER	QUANTITY
GASKET-LIQUID,TB1105B,SILVER (Ref # 92104)	92104-002	1
TOOL-WRENCH,PLUG,21MM (Ref # 92110)	92110-0571	1

© 2025 Kawasaki Motors Corp., U.S.A.