2001 Prairie 400 PARTS DIAGRAM

Headlight(s)

F2710

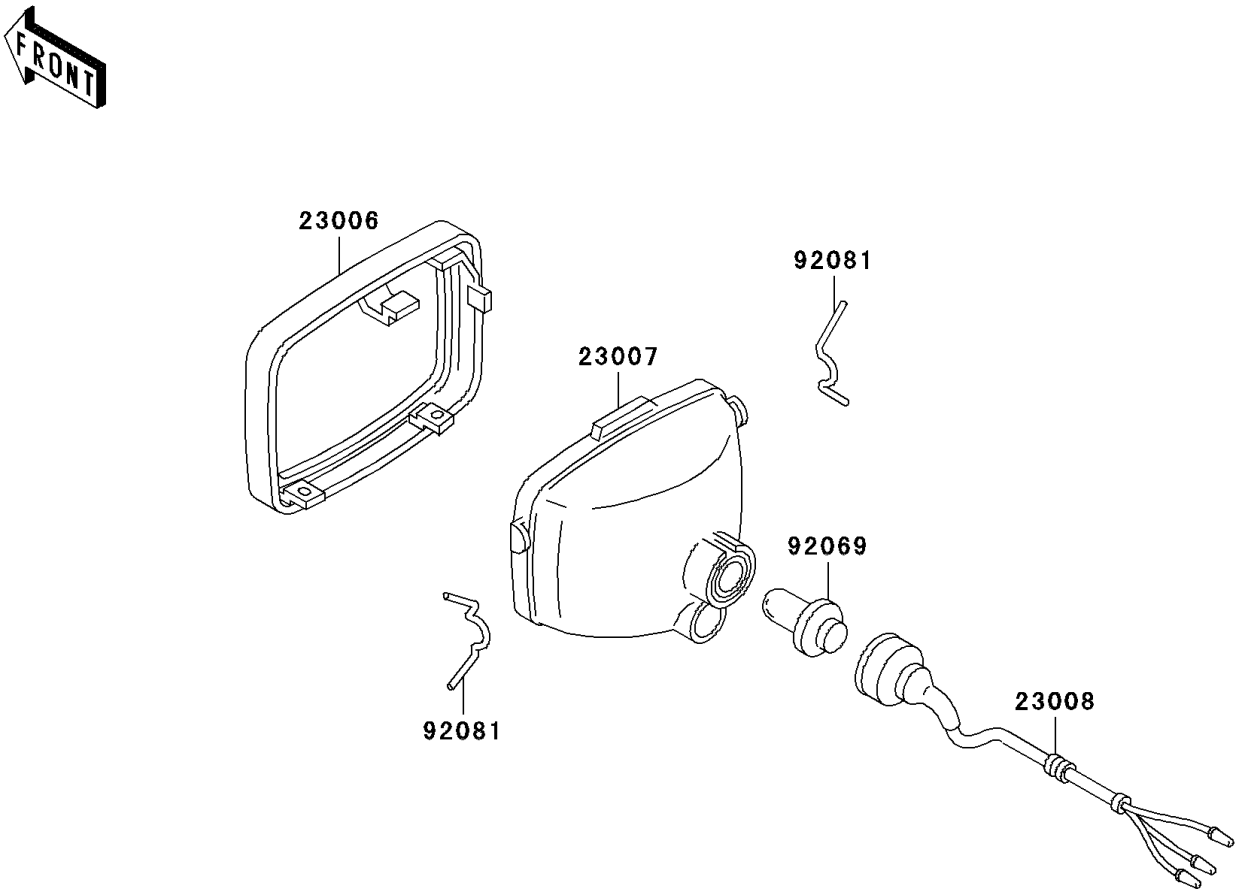

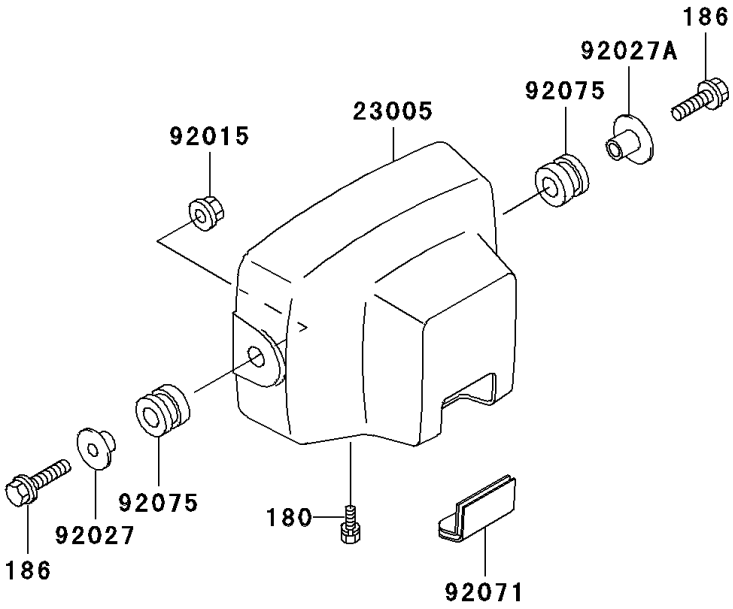

© 2024 Kawasaki Motors Corp., U.S.A.

2001 Prairie 400 PARTS LIST

Headlight(s)

ITEM NAME	PART NUMBER	QUANTITY
BOLT-UPSET-WS,5X12 (Ref # 180)	180C0512	4
BOLT-UPSET-WP,6X30 (Ref # 186)	186B0630	4
BODY-COMP-HEAD LAMP,BLACK (Ref # 23005)	23005-1018-6Z	2
RIM-LAMP (Ref # 23006)	23006-1058	2
LENS-COMP,HEAD LAMP (Ref # 23007)	23007-1274	2
SOCKET-ASSY,HEAD LAMP (Ref # 23008)	23008-1357	2
NUT,FLANGED,6MM (Ref # 92015)	92015-1367	2
COLLAR,L=9.6 (Ref # 92027)	92027-1045	2
COLLAR,L=13.1 (Ref # 92027A)	92027-251	2
BULB,12V 25/25W (Ref # 92069)	92069-1010	2
GROMMET,HEAD LAMP (Ref # 92071)	92071-1205	2
DAMPER (Ref # 92075)	92075-277	4
SPRING (Ref # 92081)	92081-1421	4

© 2024 Kawasaki Motors Corp., U.S.A.