2019 NINJA® 650 ABS PARTS DIAGRAM

Headlight(s)

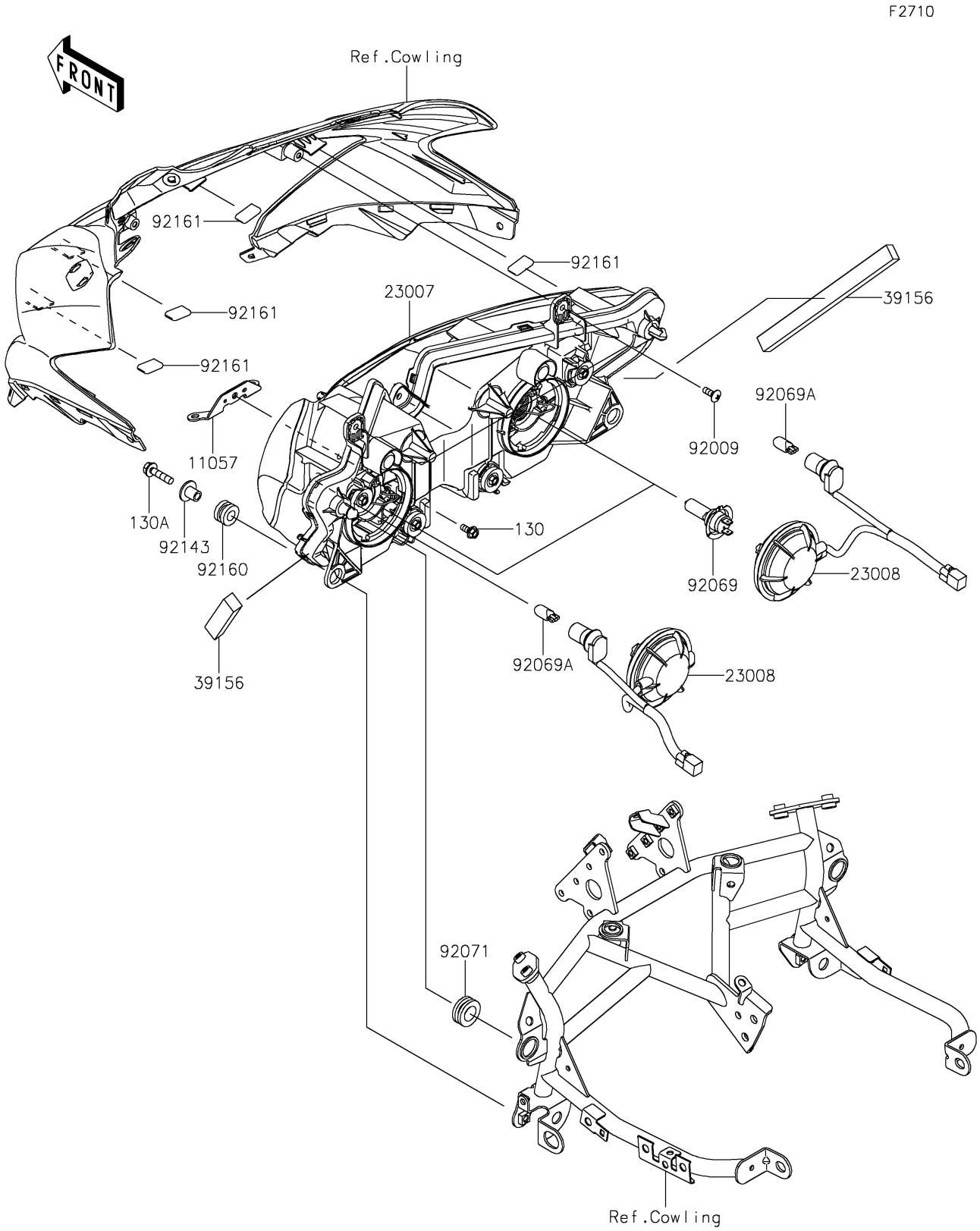

© 2026 Kawasaki Motors Corp., U.S.A.

2019 NINJA® 650 ABS PARTS LIST

Headlight(s)

ITEM NAME	PART NUMBER	QUANTITY
BRACKET (Ref # 11057)	11057-0136	1
BOLT-FLANGED,5X12 (Ref # 130)	130BA0512	1
BOLT-FLANGED,6X25 (Ref # 130A)	130BA0625	2
LENS-COMP,HEAD LAMP (Ref # 23007)	23007-0209	1
SOCKET-ASSY,HEAD LAMP (Ref # 23008)	23008-0178	2
PAD,15X170X10 (Ref # 39156)	39156-2184	2
SCREW,TAPPING,5X14 (Ref # 92009)	92009-1197	2
BULB,12V 55W,H7 (Ref # 92069)	92069-0053	2
BULB,12V 5W (Ref # 92069A)	92069-0092	2
GROMMET (Ref # 92071)	92071-1131	2
COLLAR (Ref # 92143)	92143-1353	2
DAMPER,10X20X12 (Ref # 92160)	92160-1167	2
DAMPER,12X23 (Ref # 92161)	92161-1367	4

© 2026 Kawasaki Motors Corp., U.S.A.