2018 Z650 ABS PARTS DIAGRAM

Accessory(U-Lock Bracket etc.)

F2910H

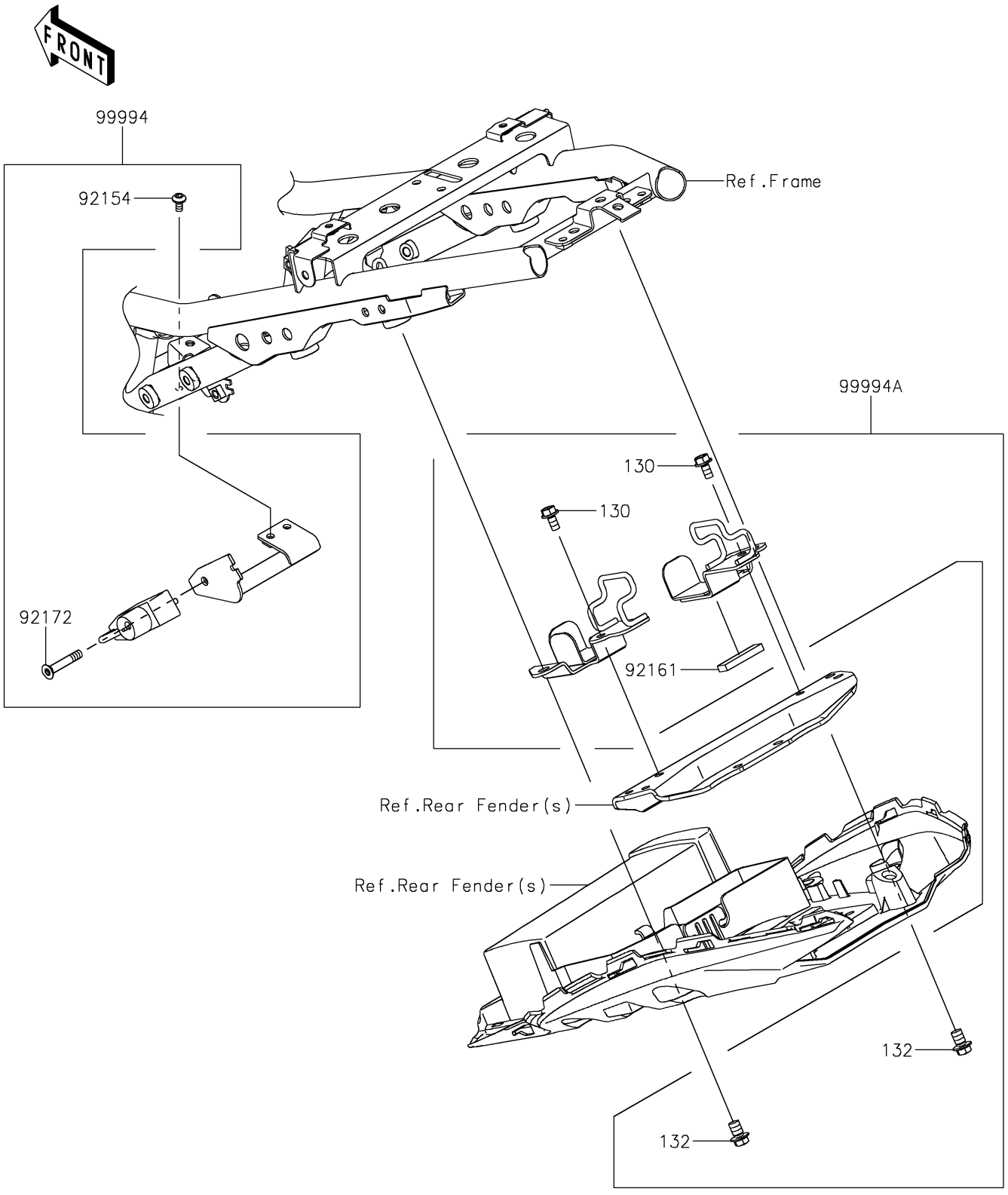

© 2024 Kawasaki Motors Corp., U.S.A.

2018 Z650 ABS PARTS LIST

Accessory(U-Lock Bracket etc.)

ITEM NAME	PART NUMBER	QUANTITY
BOLT-FLANGED,6X12 (Ref # 130)	130BA0612	2
BOLT-FLANGED-SMALL (Ref # 132)	132BA0812	2
BOLT,SOCKET,5X10 (Ref # 92154)	92154-0211	2
DAMPER,TANK COVER (Ref # 92161)	92161-0804	1
SCREW,HEXLOBE,6X35 (Ref # 92172)	92172-0835	1
KIT-ACCESSORY,HELMET LOCK (Ref # 99994)	99994-0809	1
KIT-ACC,BRACKET FOR U-LOCK (Ref # 99994A)	99994-0985	1

© 2024 Kawasaki Motors Corp., U.S.A.