2017 Ninja 300 ABS KRT Edition PARTS DIAGRAM

Brake Piping

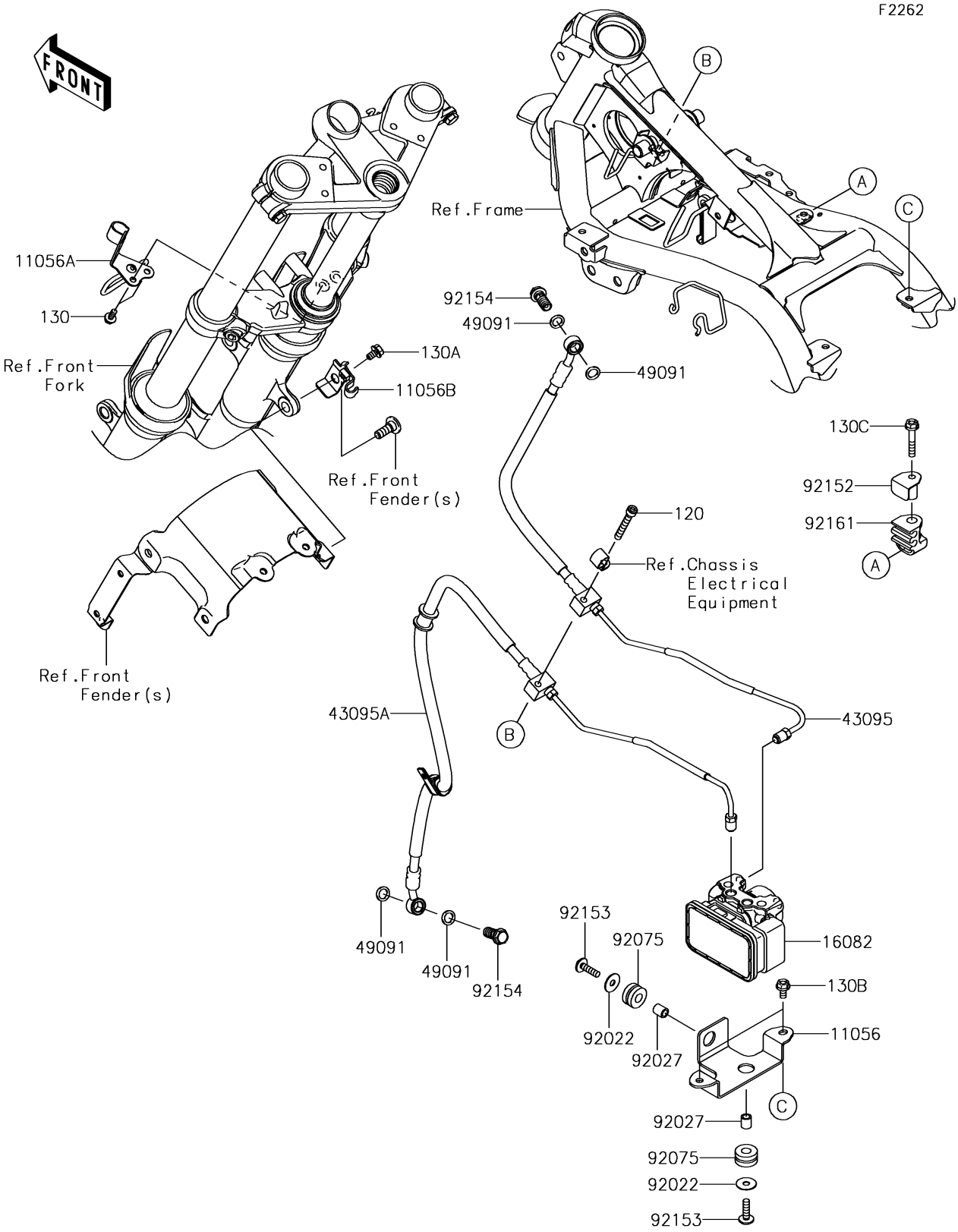

© 2026 Kawasaki Motors Corp., U.S.A.

2017 Ninja 300 ABS KRT Edition PARTS LIST

Brake Piping

ITEM NAME	PART NUMBER	QUANTITY
BRACKET (Ref # 11056)	11056-1815	1
BRACKET (Ref # 11056A)	11056-2225	1
BRACKET (Ref # 11056B)	11056-2302	1
BOLT-SOCKET,6X45 (Ref # 120)	120CA0645	1
BOLT-FLANGED,5X12 (Ref # 130)	130BB0512	2
BOLT-FLANGED,6X10 (Ref # 130A)	130BB0610	1
BOLT-FLANGED,6X12 (Ref # 130B)	130BB0612	2
BOLT-FLANGED,6X35 (Ref # 130C)	130BB0635	1
PUMP-ASSY-OIL,ABS,WET (Ref # 16082)	16082-0744	1
HOSE-BRAKE,FR M/CYLINDER (Ref # 43095)	43095-0693	1
HOSE-BRAKE,FR CALIPER (Ref # 43095A)	43095-0771	1
WASHER-SEAL,10.1X14.5X1.5 (Ref # 49091)	49091-0001	4
WASHER,PLAIN,6.5X20X1 (Ref # 92022)	92022-165	2
COLLAR,6.8X10X11.5 (Ref # 92027)	92027-1210	2
DAMPER (Ref # 92075)	92075-209	2
COLLAR (Ref # 92152)	92152-0409	1
BOLT,SOCKET,6X22 (Ref # 92153)	92153-0574	2
BOLT,OIL,L=23 (Ref # 92154)	92154-0226	2
DAMPER,BRAKE PIPE (Ref # 92161)	92161-0347	1

© 2026 Kawasaki Motors Corp., U.S.A.