2015 KX™65 PARTS DIAGRAM

Engine Mount

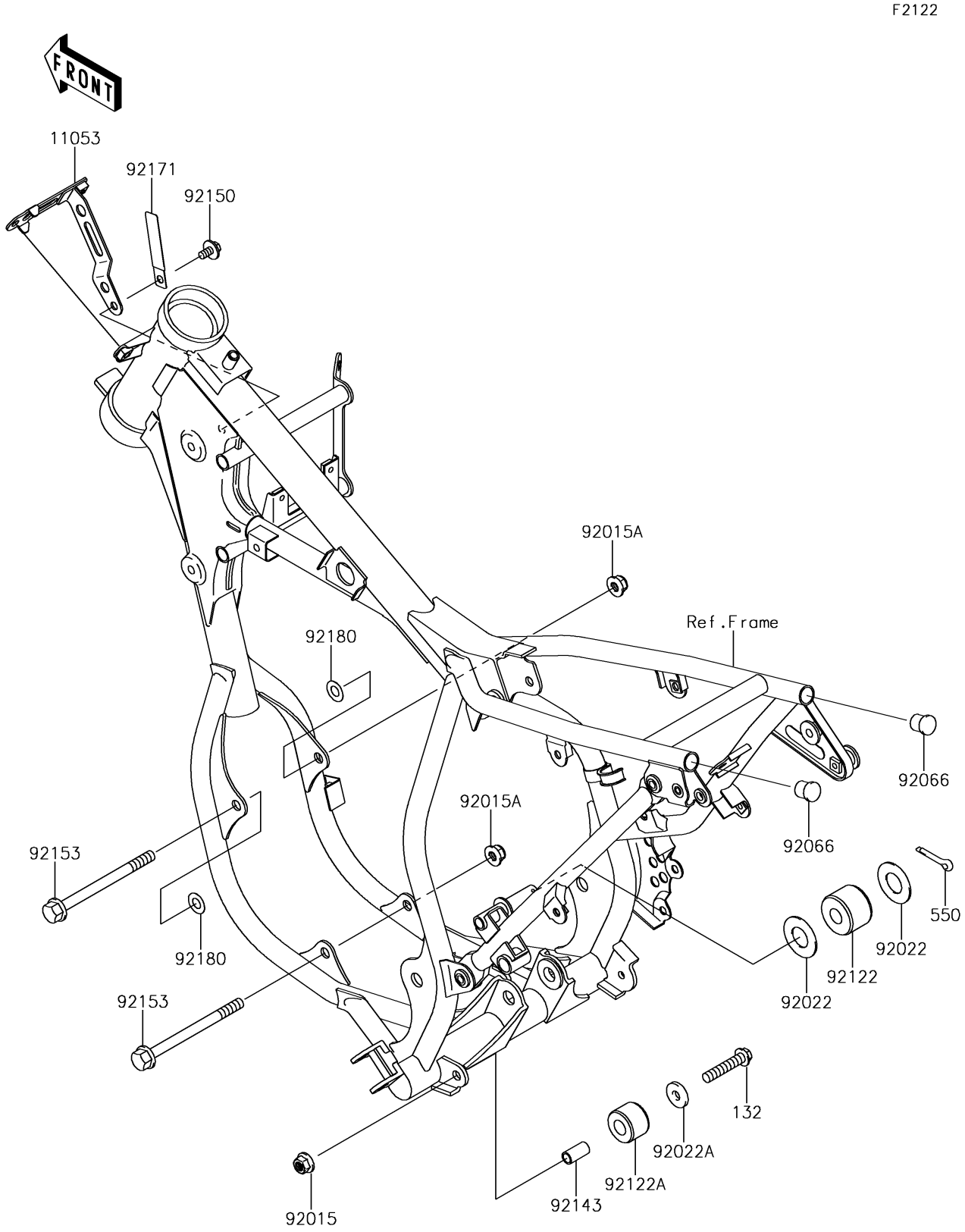

© 2026 Kawasaki Motors Corp., U.S.A.

2015 KX™65 PARTS LIST

Engine Mount

ITEM NAME	PART NUMBER	QUANTITY
BRACKET,IGNITER (Ref # 11053)	11053-1682	1
BOLT-FLANGED-SMALL,8X40 (Ref # 132)	132BA0840	1
PIN-COTTER,2.5X18 (Ref # 550)	550AA2518	1
NUT,FLANGED,8MM (Ref # 92015)	92015-1406	1
NUT,8MM (Ref # 92015A)	92015-1432	2
WASHER (Ref # 92022)	92022-107	2
WASHER,8.5X20X1.6 (Ref # 92022A)	92022-1561	1
PLUG (Ref # 92066)	92066-1081	2
ROLLER,CHAIN GUIDE (Ref # 92122)	92122-1179	1
ROLLER,CHAIN GUIDE (Ref # 92122A)	92122-1213	1
COLLAR,9.5X12.7X25 (Ref # 92143)	92143-1432	1
BOLT,6X12 (Ref # 92150)	92150-1891	1
BOLT,FLANGED,8X110 (Ref # 92153)	92153-1095	2
CLAMP,L=60 (Ref # 92171)	92171-0652	1
SHIM,9X18X0.3 (Ref # 92180)	92180-1354	AR

© 2026 Kawasaki Motors Corp., U.S.A.