2013 TERYX4™ 750 4x4 EPS Realtree APG HD PARTS DIAGRAM

Guard(s)

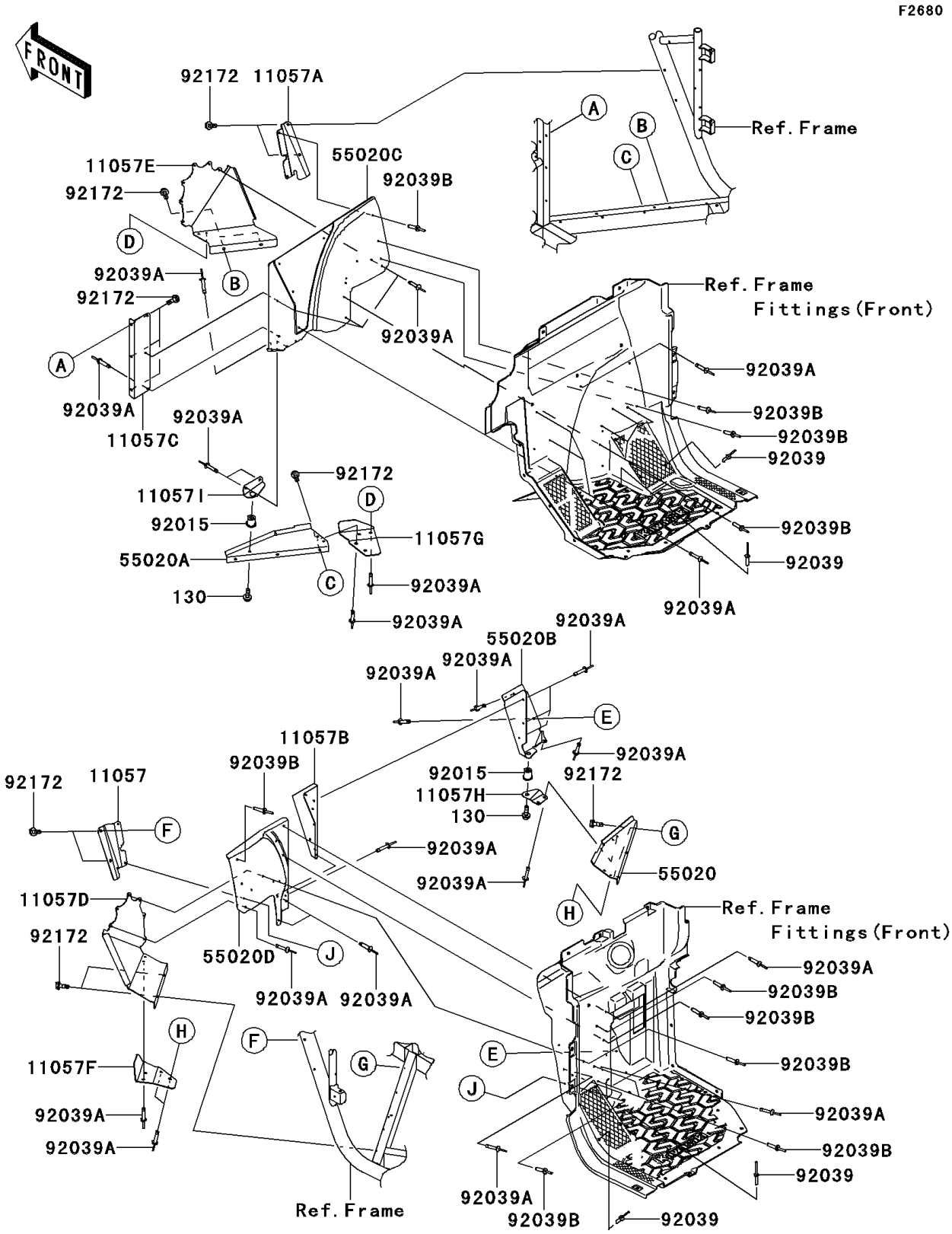

© 2024 Kawasaki Motors Corp., U.S.A.

2013 TERYX4™ 750 4x4 EPS Realtree APG HD PARTS LIST

Guard(s)

ITEM NAME	PART NUMBER	QUANTITY
BRACKET (Ref # 11057)	11057-0343	1
BRACKET (Ref # 11057A)	11057-0344	1
BRACKET (Ref # 11057B)	11057-0345	1
BRACKET (Ref # 11057C)	11057-0346	1
BRACKET (Ref # 11057D)	11057-0347	1
BRACKET (Ref # 11057E)	11057-0348	1
BRACKET (Ref # 11057F)	11057-0349	1
BRACKET (Ref # 11057G)	11057-0350	1
BRACKET (Ref # 11057H)	11057-0351	1
BRACKET (Ref # 11057I)	11057-0352	1
BOLT-FLANGED,6X18 (Ref # 130)	130BA0618	2
GUARD,FLOOR,LH,IN (Ref # 55020)	55020-1978	1
GUARD,FLOOR,RH,IN (Ref # 55020A)	55020-1979	1
GUARD,FLOOR COVER (Ref # 55020B)	55020-1981	1
GUARD,FLOOR COVER (Ref # 55020C)	55020-1982	1
GUARD,FLOOR COVER (Ref # 55020D)	55020-1983	1
NUT (Ref # 92015)	92015-1700	2
RIVET,4.0X17.5 (Ref # 92039)	92039-0703	16
RIVET,4.8X23.3 (Ref # 92039A)	92039-0772	35
RIVET (Ref # 92039B)	92039-3778	14
SCREW,TAPPING,6X16 (Ref # 92172)	92172-0869	17

© 2024 Kawasaki Motors Corp., U.S.A.