2004 KFX700 V Force PARTS DIAGRAM

Muffler(s)

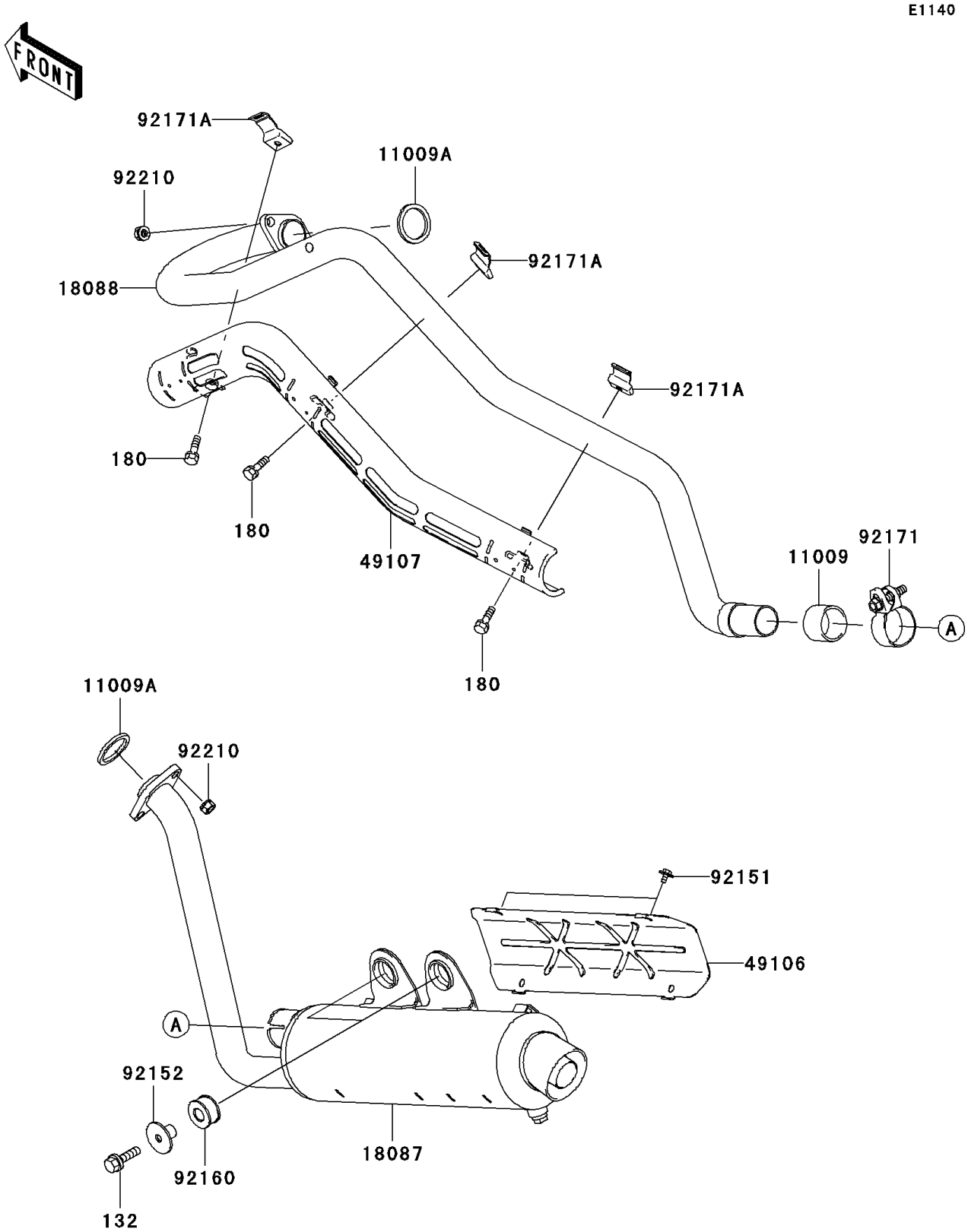

© 2024 Kawasaki Motors Corp., U.S.A.

2004 KFX700 V Force PARTS LIST

Muffler(s)

ITEM NAME	PART NUMBER	QUANTITY
BOLT-FLANGED-SMALL (Ref # 132)	132Y0830	2
BOLT-UPSET-WS (Ref # 180)	180Y0620	3
GASKET,MUFFLER CONNECTING (Ref # 11009)	11009-1865	1
GASKET,EXHAUST HOLDER (Ref # 11009A)	11009-1894	2
MUFFLER (Ref # 18087)	18087-0006	1
PIPE-EXHAUST (Ref # 18088)	18088-1222	1
COVER-MUFFLER (Ref # 49106)	49106-1293	1
COVER-EXHAUST PIPE (Ref # 49107)	49107-1226	1
BOLT,6X12 (Ref # 92151)	92151-1944	4
COLLAR,MUFFLER (Ref # 92152)	92152-1152	2
DAMPER,MUFFLER (Ref # 92160)	92160-1990	2
CLAMP (Ref # 92171)	92171-1330	1
CLAMP (Ref # 92171A)	92171-1357	3
NUT,RH,THREAD 8MM (Ref # 92210)	92210-1242	4

© 2024 Kawasaki Motors Corp., U.S.A.