# 2018 KLR™650 CAMO PARTS DIAGRAM

Stand(s)

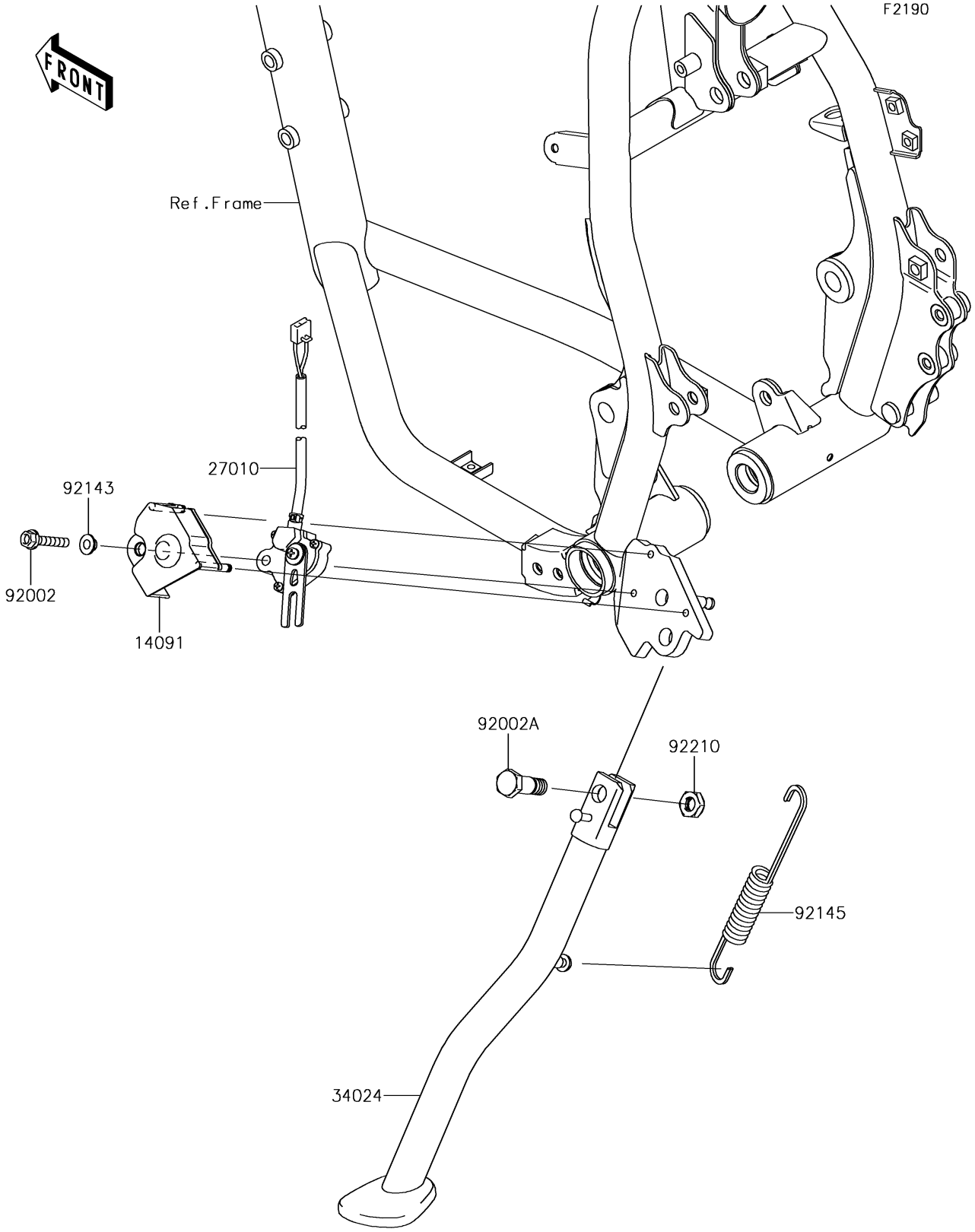


© 2026 Kawasaki Motors Corp., U.S.A.

# 2018 KLR™650 CAMO PARTS LIST

Stand(s)

| ITEM NAME | PART NUMBER | QUANTITY |
|---|---|---|
| COVER,SIDE STAND SWITCH (Ref # 14091) | 14091-1553 | 1 |
| SWITCH,SIDE STAND (Ref # 27010) | 27010-0118 | 1 |
| STAND-SIDE,F.S.BLACK (Ref # 34024) | 34024-0031-18R | 1 |
| BOLT,FLANGED,6X25 (Ref # 92002) | 92002-1582 | 1 |
| BOLT,SIDE STAND (Ref # 92002A) | 92002-1813 | 1 |
| COLLAR (Ref # 92143) | 92143-1331 | 1 |
| SPRING,SIDE STAND (Ref # 92145) | 92145-0085 | 1 |
| NUT,LOCK,10MM (Ref # 92210) | 92210-1184 | 1 |

© 2026 Kawasaki Motors Corp., U.S.A.