2003 Mojave 250 PARTS DIAGRAM

Carburetor(KSF250-A17/A18)

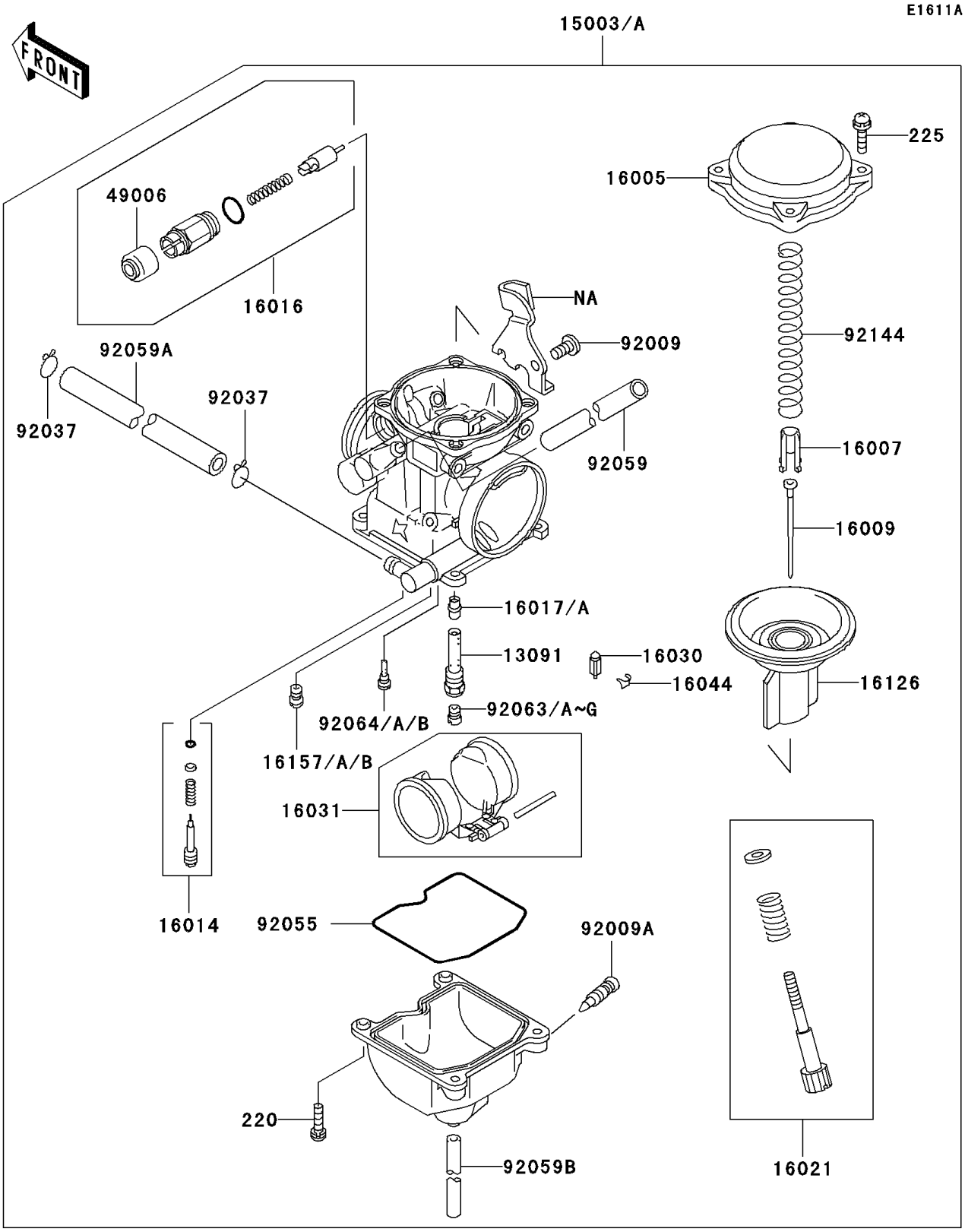

© 2024 Kawasaki Motors Corp., U.S.A.

2003 Mojave 250 PARTS LIST

Carburetor(KSF250-A17/A18)

ITEM NAME	PART NUMBER	QUANTITY
HOLDER,NEEDLE JET (Ref # 13091)	13091-1259	1
TOP-CHAMBER,MIXING,27/60 (Ref # 16005)	16005-1057	1
SEAT-SPRING,VALVE (Ref # 16007)	16007-1134	1
NEEDLE-JET,N54C (Ref # 16009)	16009-1333	1
SCREW-PILOT AIR (Ref # 16014)	16014-1080	1
PLUNGER,STARTER (Ref # 16016)	16016-1101	1
SCREW-THROTTLE STOP (Ref # 16021)	16021-1201	1
VALVE-FLOAT (Ref # 16030)	16030-1007	1
FLOAT (Ref # 16031)	16031-1077	1
CLAMP,FLOAT VALVE (Ref # 16044)	16044-007	1
VALVE,VACUUM (Ref # 16126)	16126-1180	1
JET-STARTER,#55 (Ref # 16157)	16157-1056	1
JET-STARTER,#58 (Ref # 16157A)	16157-1057	1
JET-STARTER,#60 (Ref # 16157B)	16157-1058	1
SCREW,5X10 (Ref # 92009)	92009-1365	1
SCREW,DRAIN,M6X0.75 (Ref # 92009A)	92009-1551	1
CLAMP,TUBE (Ref # 92037)	92037-1531	2
RING-O,FLOAT CHAMBER (Ref # 92055)	92055-1222	1
TUBE,6.5X9.5X500 (Ref # 92059)	92059-1465	1
TUBE,6.5X11.5X360 (Ref # 92059A)	92059-1751	1
TUBE,3.5X6.5X300 (Ref # 92059B)	92059-1752	1
JET-MAIN,#135 (Ref # 92063A)	92063-1014	1
JET-MAIN,#138 (Ref # 92063B)	92063-1015	1
SCREW-PAN-CROS (Ref # 220)	220D0414	4
SCREW-PAN-WSP-CROS (Ref # 225)	225C0418	4
JET-PILOT,#38 (Ref # 92064)	92064-1050	1
JET-PILOT,#35 (Ref # 92064A)	92064-1101	1
JET-PILOT,#32 (Ref # 92064B)	92064-1117	1
SPRING,VACUUM VALVE (Ref # 92144)	92144-1066	1

© 2024 Kawasaki Motors Corp., U.S.A.

2003 Mojave 250 PARTS LIST

Carburetor(KSF250-A17/A18)

ITEM NAME	PART NUMBER	QUANTITY
CARBURETOR-ASSY (Ref # 15003)	15003-1747	1
CARBURETOR-ASSY (Ref # 15003A)	15003-1748	1
JET-NEEDLE (Ref # 16017)	16017-1319	1
JET-NEEDLE,#6 (Ref # 16017A)	16017-1393	1
BOOT,STARTER PLUNGER (Ref # 49006)	49006-1165	1
JET-MAIN,#140 (Ref # 92063)	92063-1013	1
JET-MAIN,#142 (Ref # 92063C)	92063-1016	1
JET-MAIN,#145 (Ref # 92063D)	92063-1017	1
JET-MAIN,#128 (Ref # 92063E)	92063-1074	1
JET-MAIN,#130 (Ref # 92063F)	92063-1075	1
JET-MAIN,#132 (Ref # 92063G)	92063-1076	1

© 2024 Kawasaki Motors Corp., U.S.A.