1997 Mojave 250 PARTS DIAGRAM

Clutch

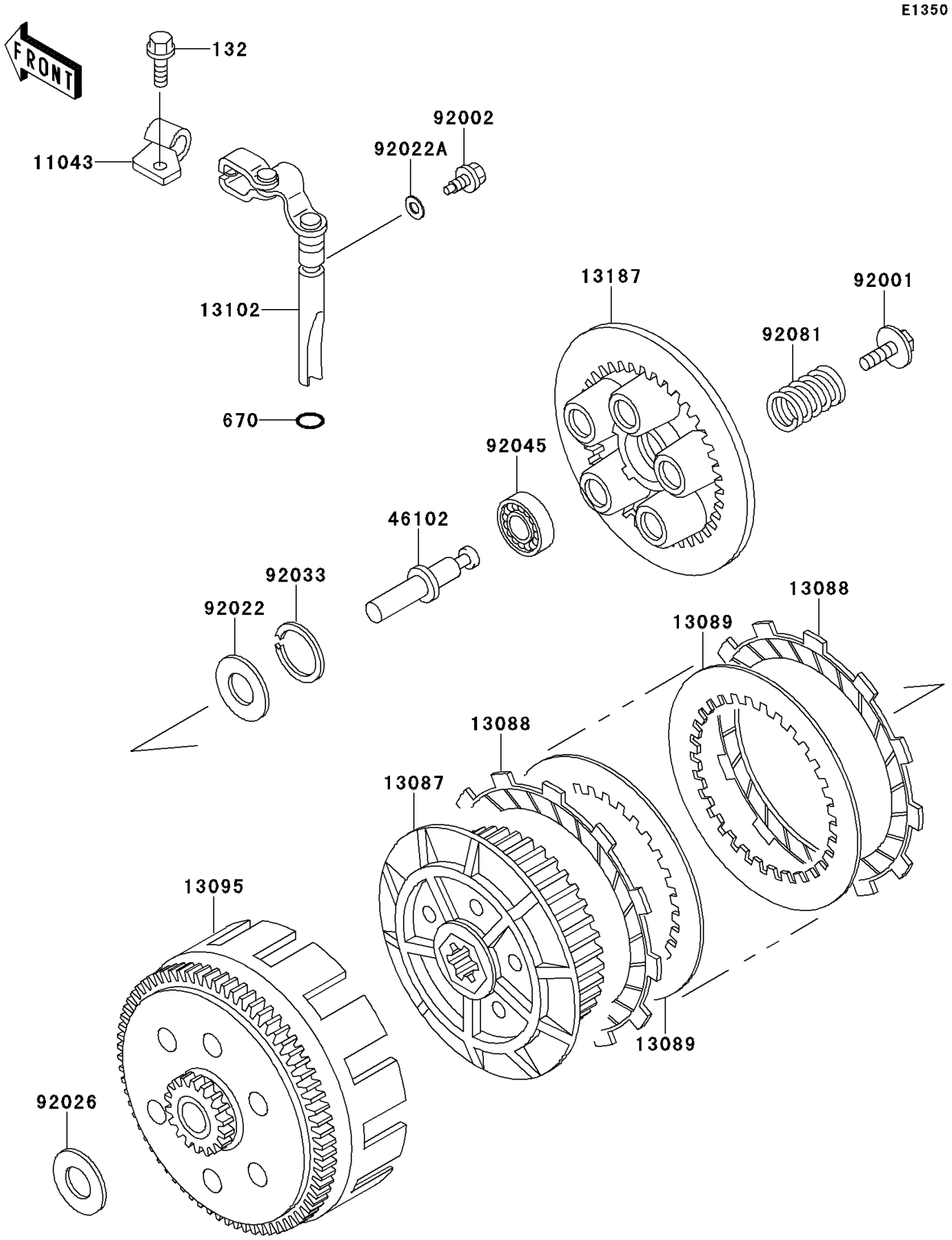

© 2026 Kawasaki Motors Corp., U.S.A.

1997 Mojave 250 PARTS LIST

Clutch

ITEM NAME	PART NUMBER	QUANTITY

© 2026 Kawasaki Motors Corp., U.S.A.