1998 Mojave 250 PARTS DIAGRAM

Cylinder Head Cover

E1112

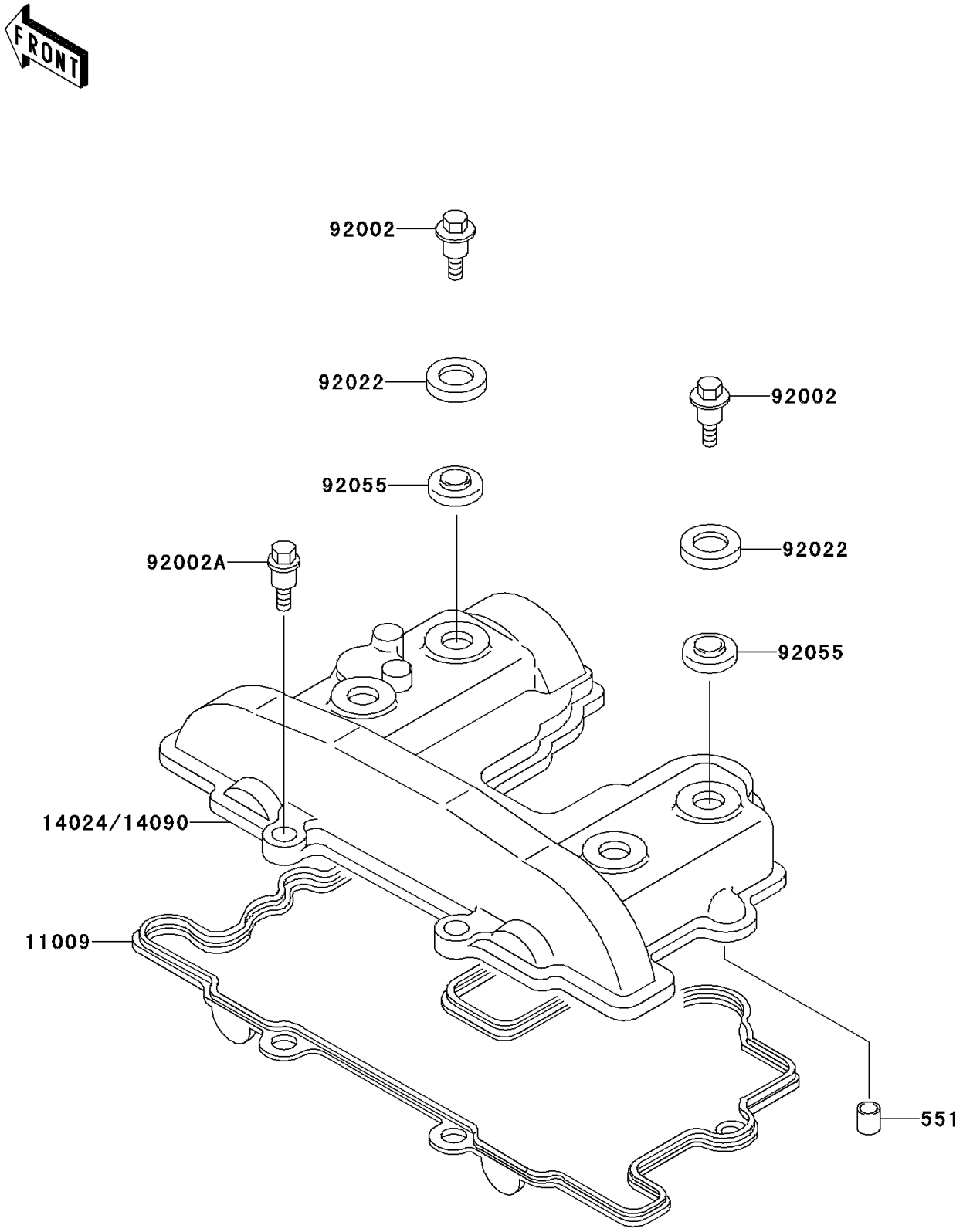

© 2024 Kawasaki Motors Corp., U.S.A.

1998 Mojave 250 PARTS LIST

Cylinder Head Cover

ITEM NAME	PART NUMBER	QUANTITY
PIN-DOWEL (Ref # 551)	551A1016	2
GASKET,HEAD COVER (Ref # 11009)	11009-1607	1
COVER,CYLINDER HEAD (Ref # 14090)	14090-1759	1
BOLT,L=20.5 (Ref # 92002)	92002-1327	4
BOLT,L=21 (Ref # 92002A)	92002-1382	2
WASHER,HEAD COVER BOLT (Ref # 92022)	92022-1487	4
RING-O,HEAD COVER BOLT (Ref # 92055)	92055-1225	4

© 2024 Kawasaki Motors Corp., U.S.A.