2018 Z250SL ABS

PARTS DIAGRAM

Air Cleaner

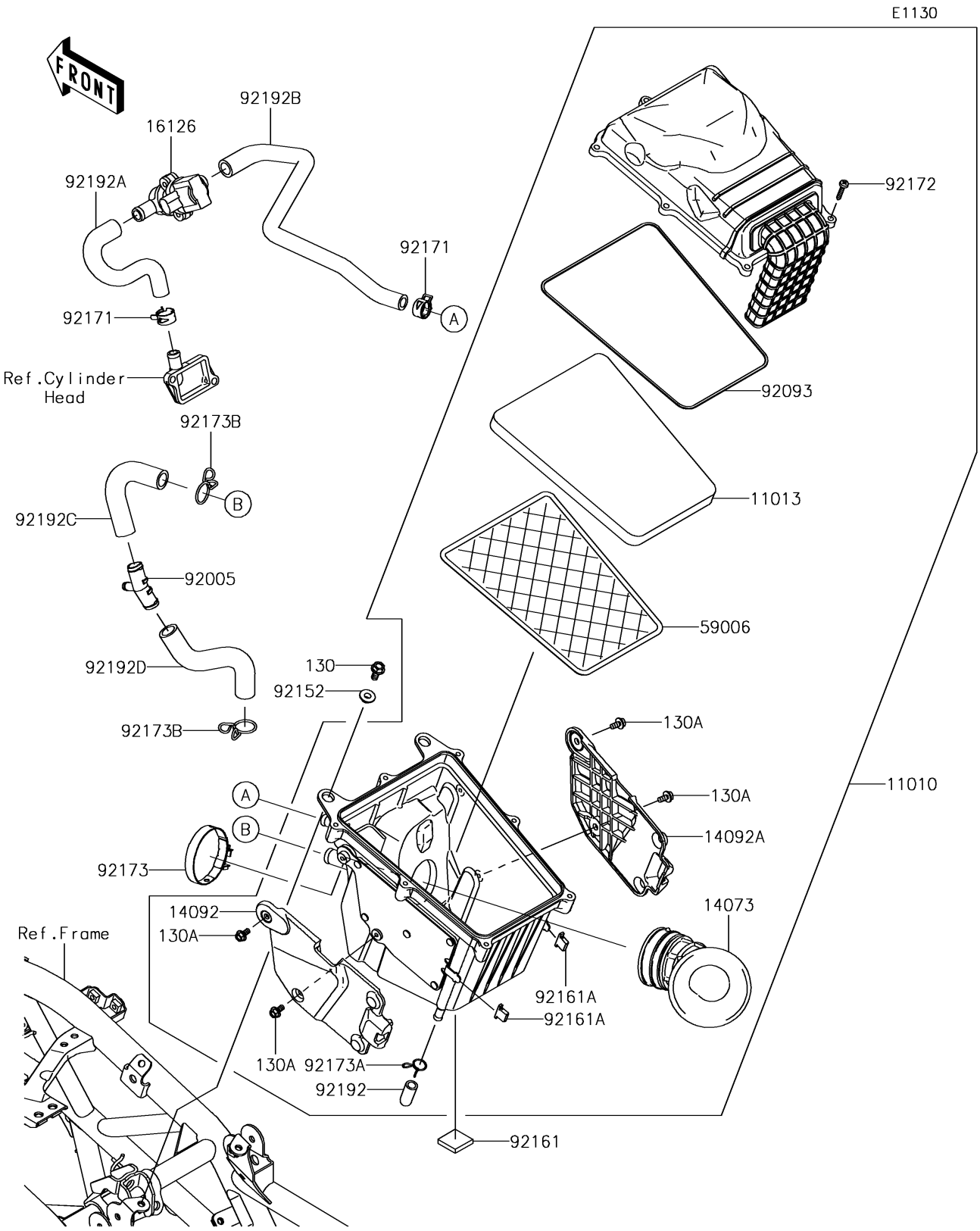

© 2026 Kawasaki Motors Corp., U.S.A.

2018 Z250SL ABS

PARTS LIST

Air Cleaner

ITEM NAME	PART NUMBER	QUANTITY
FILTER-ASSY-AIR (Ref # 11010)	11010-0773	1
ELEMENT-AIR FILTER (Ref # 11013)	11013-0739	1
BOLT-FLANGED,6X14 (Ref # 130)	130BA0614	2
BOLT-FLANGED,5X10 (Ref # 130A)	130BB0510	4
DUCT,THROTTLE BODY (Ref # 14073)	14073-0776	1
COVER,LH (Ref # 14092)	14092-1146	1
COVER,RH (Ref # 14092A)	14092-1147	1
VALVE,AIR SWITCHING (Ref # 16126)	16126-0718	1
ARRESTER-FLAME (Ref # 59006)	59006-0016	1
FITTING (Ref # 92005)	92005-1373	1
SEAL (Ref # 92093)	92093-0603	1
COLLAR (Ref # 92152)	92152-1864	2
DAMPER,25X25X5 (Ref # 92161)	92161-1596	1
DAMPER (Ref # 92161A)	92161-1626	2
CLAMP (Ref # 92171)	92171-1888	2
SCREW,TAPPING,5X25 (Ref # 92172)	92172-0851	7
CLAMP,58MM (Ref # 92173)	92173-0927	1
CLAMP,11.6MM (Ref # 92173A)	92173-1107	1
CLAMP,20MM (Ref # 92173B)	92173-1188	2
TUBE,DRAIN (Ref # 92192)	92192-1292	1
TUBE,CAP-ASWV (Ref # 92192A)	92192-1293	1
TUBE,ASWV-AIR CLEANER (Ref # 92192B)	92192-1294	1
TUBE,FITTING-AIR FILTER (Ref # 92192C)	92192-1307	1
TUBE,CRANKCASE-FITTING (Ref # 92192D)	92192-1308	1

© 2026 Kawasaki Motors Corp., U.S.A.