2014 JET SKI® ULTRA® 310X SE PARTS DIAGRAM

Hull Middle Fittings

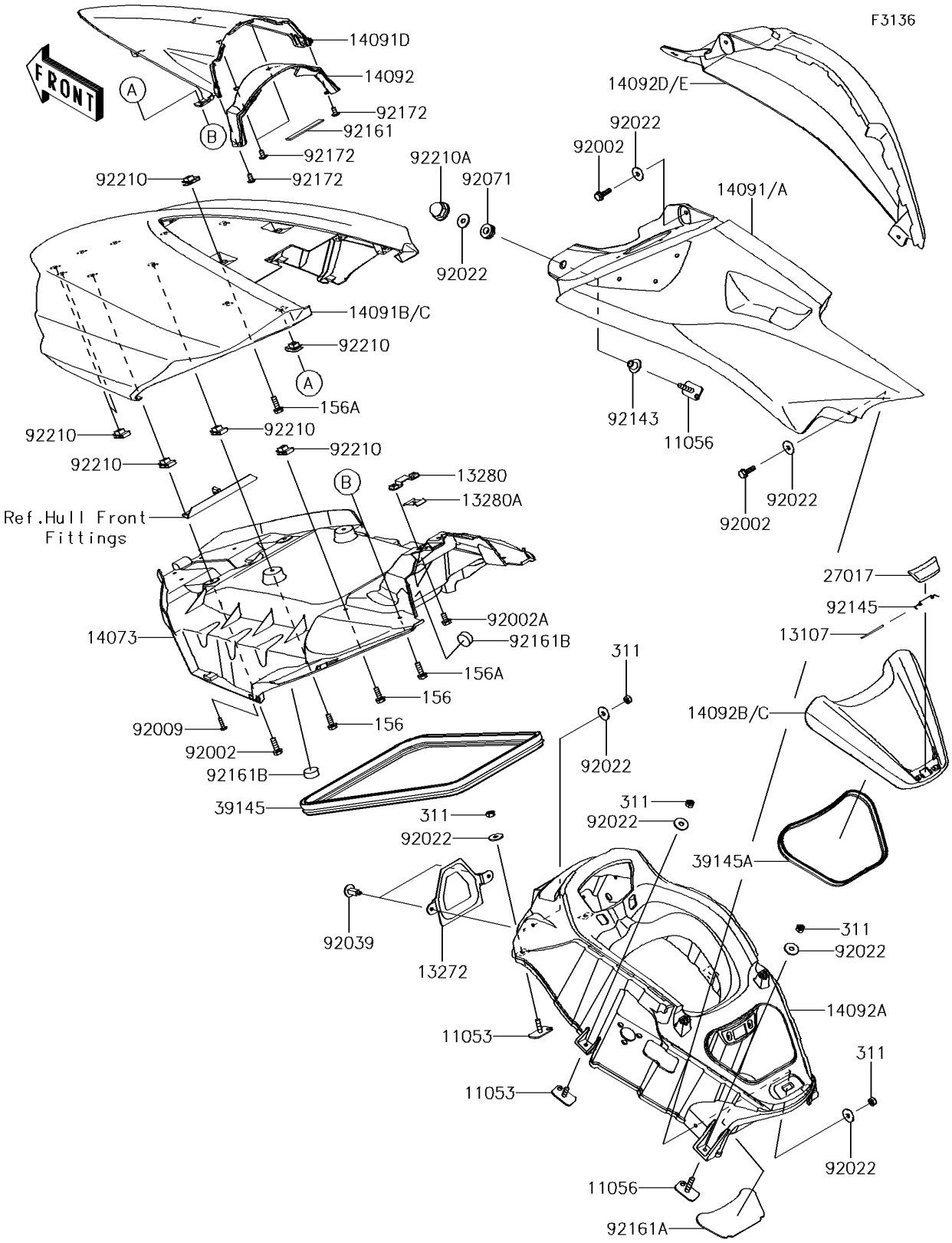

© 2026 Kawasaki Motors Corp., U.S.A.

2014 JET SKI® ULTRA® 310X SE PARTS LIST

Hull Middle Fittings

ITEM NAME	PART NUMBER	QUANTITY
BRACKET (Ref # 11053)	11053-3776	4
BRACKET (Ref # 11056)	11056-3724	4
SHAFT (Ref # 13107)	13107-3790	1
PLATE,INTAKE COVER (Ref # 13272)	13272-1221	1
HOLDER,ROD (Ref # 13280)	13280-3749	1
HOLDER,ROD (Ref # 13280A)	13280-3751	1
DUCT,HATCH,INNER (Ref # 14073)	14073-3837	1
COVER,SIDE,LH,S.RED (Ref # 14091A)	14091-3780-H1	1
COVER,FR HATCH,S.RED (Ref # 14091C)	14091-3824-H1	1
COVER,METER,FR (Ref # 14091D)	14091-3825	1
COVER,METER,RR,EBONY (Ref # 14092)	14092-0776-H8	1
COVER,CENTER,F.BLACK (Ref # 14092A)	14092-0980-6Z	1
COVER,CENTER STORAGE,S.RED (Ref # 14092C)	14092-3701-H1	1
COVER,SIDE,RH,S.RED (Ref # 14092E)	14092-3708-H1	1
BOLT-WP,6X18 (Ref # 156)	156R0618	4
BOLT-WP,6X20 (Ref # 156A)	156R0620	4
LOCK,CENTER STORAGE (Ref # 27017)	27017-3726	1
NUT-HEX,6MM (Ref # 311)	311R0600	10
TRIM-SEAL (Ref # 39145)	39145-3793	1
TRIM-SEAL,L=720 (Ref # 39145A)	39145-3802	1
BOLT,6X20 (Ref # 92002)	92002-3755	6
BOLT,6X12 (Ref # 92002A)	92002-3763	2
SCREW,TAPPING,4X16 (Ref # 92009)	92009-3849	2
WASHER,6.5X20X1.5 (Ref # 92022)	92022-3710	16
RIVET (Ref # 92039)	92039-3788	2
GROMMET (Ref # 92071)	92071-3716	2
COLLAR (Ref # 92143)	92143-3750	2
SPRING (Ref # 92145)	92145-3729	1
DAMPER,16X100X3.18 (Ref # 92161)	92161-0968	1

© 2026 Kawasaki Motors Corp., U.S.A.

2014 JET SKI® ULTRA® 310X SE PARTS LIST

Hull Middle Fittings

ITEM NAME	PART NUMBER	QUANTITY
DAMPER,CENTER STORAGE (Ref # 92161A)	92161-3773	1
DAMPER (Ref # 92161B)	92161-3790	4
SCREW,5X12 (Ref # 92172)	92172-3714	4
NUT,6MM (Ref # 92210)	92210-3768	14
NUT,CAP,6MM (Ref # 92210A)	92210-3785	2

© 2026 Kawasaki Motors Corp., U.S.A.