2014 JET SKI® ULTRA® 310X SE PARTS DIAGRAM

Fuel Injection

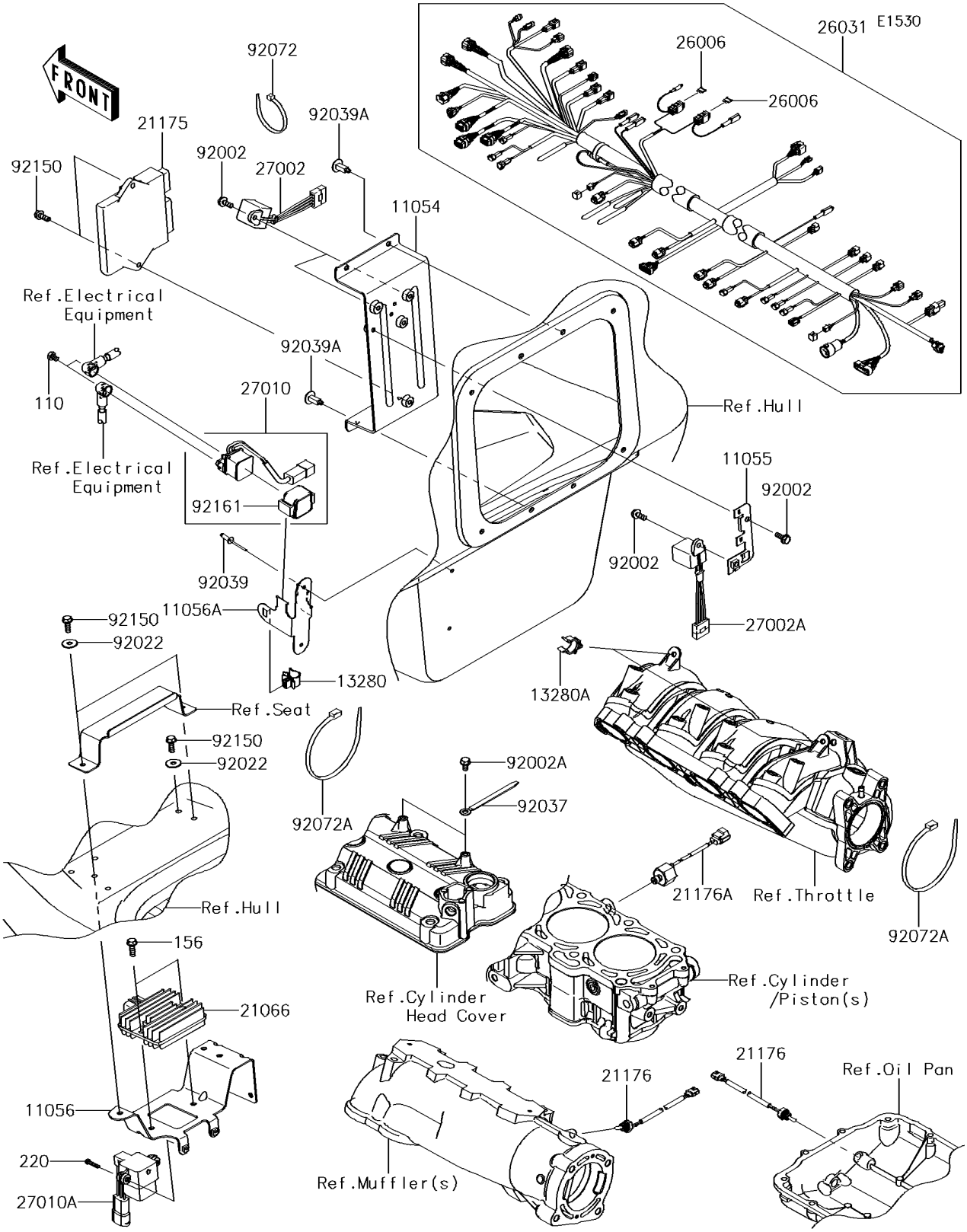

© 2026 Kawasaki Motors Corp., U.S.A.

2014 JET SKI® ULTRA® 310X SE PARTS LIST

Fuel Injection

ITEM NAME	PART NUMBER	QUANTITY
BOLT,6X8 (Ref # 110)	110R0608	2
BRACKET,ECU&RELAY (Ref # 11054)	11054-3743	1
BRACKET,FUSE (Ref # 11055)	11055-3713	1
BRACKET,REGULATOR&VDS (Ref # 11056)	11056-3702	1
BRACKET,SWITCH (Ref # 11056A)	11056-3855	1
HOLDER (Ref # 13280)	13280-0789	1
HOLDER,HARNESS (Ref # 13280A)	13280-3760	2
BOLT-WP,6X20 (Ref # 156)	156R0620	2
REGULATOR-VOLTAGE (Ref # 21066)	21066-3718	1
CONTROL UNIT-ELECTRONIC (Ref # 21175)	21175-0954	1
SENSOR,TEMP (Ref # 21176)	21176-0741	2
SENSOR,KNOCK (Ref # 21176A)	21176-0770	1
SCREW-PAN-CROS,4X20 (Ref # 220)	220R0420	2
FUSE,MINI BLADE,20A,YELLOW (Ref # 26006)	26006-3704	2
HARNESS,MAIN (Ref # 26031)	26031-1698	1
RELAY-ASSY (Ref # 27002)	27002-3703	2
RELAY-ASSY (Ref # 27002A)	27002-3704	1
SWITCH (Ref # 27010)	27010-0710	1
SWITCH,VDS (Ref # 27010A)	27010-3785	1
BOLT,6X16 (Ref # 92002)	92002-3728	4
BOLT,6X12 (Ref # 92002A)	92002-3763	2
WASHER,6.5X20X1.5 (Ref # 92022)	92022-3710	3
CLAMP,L=100 (Ref # 92037)	92037-3736	2
RIVET (Ref # 92039)	92039-3714	2
RIVET (Ref # 92039A)	92039-3788	4
BAND,L=188.85 (Ref # 92072)	92072-0105	1
BAND,L=372.24 (Ref # 92072A)	92072-3883	2
BOLT,6X18 (Ref # 92150)	92150-3729	5
DAMPER,SWITCH (Ref # 92161)	92161-1625	1

© 2026 Kawasaki Motors Corp., U.S.A.