2014 JET SKI® ULTRA® 310X SE PARTS DIAGRAM

Valve(s)

E1210

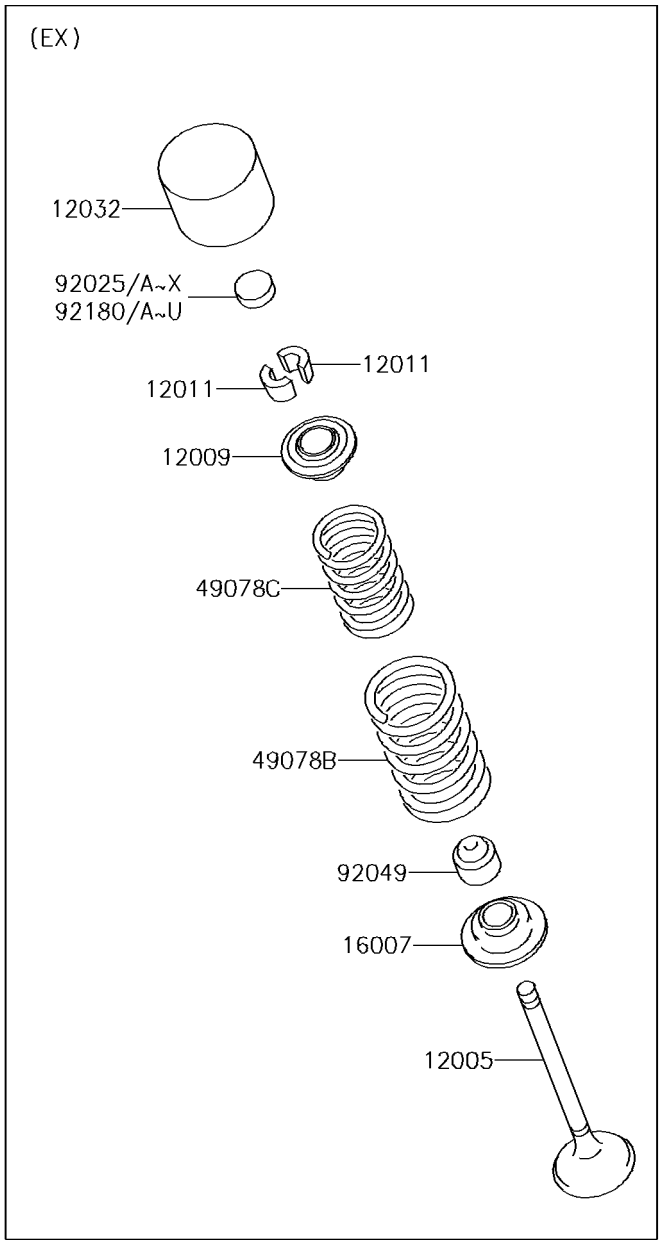

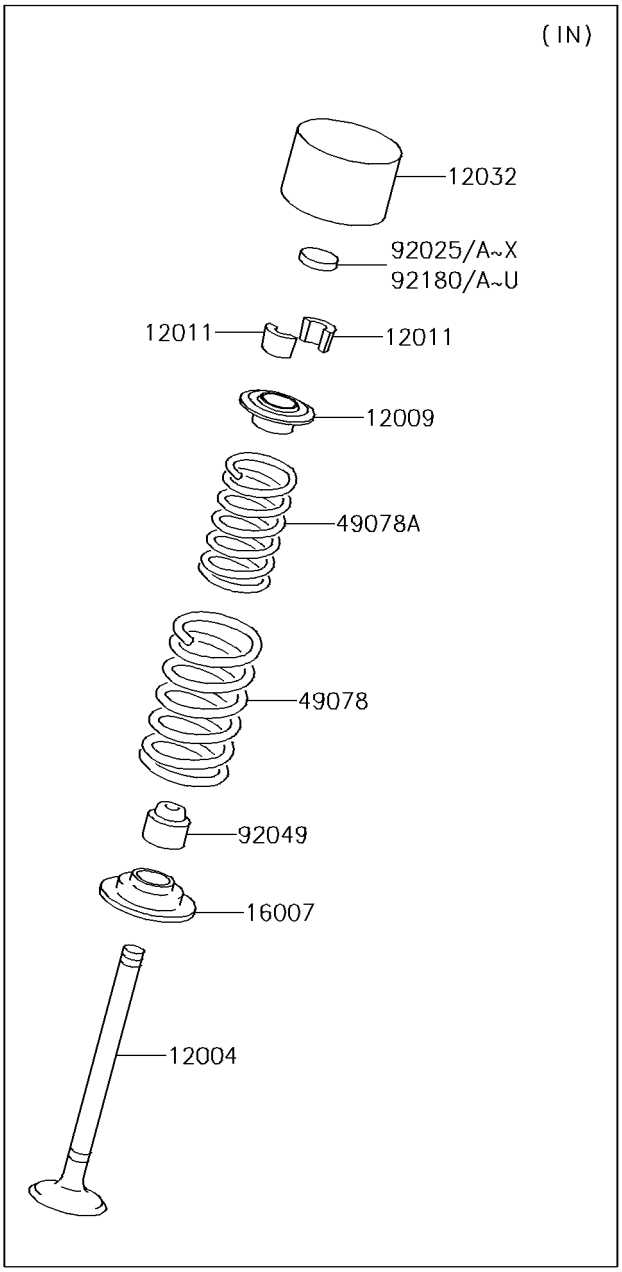

© 2026 Kawasaki Motors Corp., U.S.A.

2014 JET SKI® ULTRA® 310X SE PARTS LIST

Valve(s)

ITEM NAME	PART NUMBER	QUANTITY
VALVE-INTAKE (Ref # 12004)	12004-1154	8
VALVE-EXHAUST (Ref # 12005)	12005-0723	8
RETAINER-VALVE SPRING (Ref # 12009)	12009-3701	16
COLLET (Ref # 12011)	12011-1051	32
TAPPET (Ref # 12032)	12032-3701	16
SEAT-SPRING (Ref # 16007)	16007-1163	16
SPRING-VALVE,INTAKE,OUTER (Ref # 49078)	49078-1194	8
SPRING-VALVE,INTAKE,INNER (Ref # 49078A)	49078-1195	8
SPRING-VALVE,EXHAUST,OUTER (Ref # 49078B)	49078-1197	8
SPRING-VALVE,EXHAUST,INNER (Ref # 49078C)	49078-1198	8
SHIM,T=2.00 (Ref # 92025)	92025-1870	16
SHIM,T=2.05 (Ref # 92025A)	92025-1871	AR
SHIM,T=2.10 (Ref # 92025B)	92025-1872	AR
SHIM,T=2.15 (Ref # 92025C)	92025-1873	AR
SHIM,T=2.20 (Ref # 92025D)	92025-1874	AR
SHIM,T=2.25 (Ref # 92025E)	92025-1875	AR
SHIM,T=2.30 (Ref # 92025F)	92025-1876	AR
SHIM,T=2.35 (Ref # 92025G)	92025-1877	AR
SHIM,T=2.40 (Ref # 92025H)	92025-1878	AR
SHIM,T=2.45 (Ref # 92025I)	92025-1879	AR
SHIM,T=2.50 (Ref # 92025J)	92025-1880	AR
SHIM,T=2.55 (Ref # 92025K)	92025-1881	AR
SHIM,T=2.60 (Ref # 92025L)	92025-1882	AR
SHIM,T=2.65 (Ref # 92025M)	92025-1883	AR
SHIM,T=2.70 (Ref # 92025N)	92025-1884	AR
SHIM,T=2.75 (Ref # 92025O)	92025-1885	AR
SHIM,T=2.80 (Ref # 92025P)	92025-1886	AR
SHIM,T=2.85 (Ref # 92025Q)	92025-1887	AR
SHIM,T=2.90 (Ref # 92025R)	92025-1888	AR

© 2026 Kawasaki Motors Corp., U.S.A.

2014 JET SKI® ULTRA® 310X SE PARTS LIST

Valve(s)

ITEM NAME	PART NUMBER	QUANTITY
SHIM,T=2.95 (Ref # 92025S)	92025-1889	AR
SHIM,T=3.00 (Ref # 92025T)	92025-1890	AR
SHIM,T=2.425 (Ref # 92025U)	92025-1982	AR
SHIM,T=2.475 (Ref # 92025V)	92025-1983	AR
SHIM,T=2.525 (Ref # 92025W)	92025-1984	AR
SHIM,T=2.575 (Ref # 92025X)	92025-1985	AR
SEAL-OIL,RVCI 5X8.7X8 (Ref # 92049)	92049-1509	16
SHIM,T=2.025 (Ref # 92180)	92180-0209	AR
SHIM,T=2.075 (Ref # 92180A)	92180-0210	AR
SHIM,T=2.125 (Ref # 92180B)	92180-0211	AR
SHIM,T=2.175 (Ref # 92180C)	92180-0212	AR
SHIM,T=2.225 (Ref # 92180D)	92180-0213	AR
SHIM,T=2.275 (Ref # 92180E)	92180-0214	AR
SHIM,T=2.325 (Ref # 92180F)	92180-0215	AR
SHIM,T=1.775 (Ref # 92180G)	92180-0221	AR
SHIM,T=1.825 (Ref # 92180H)	92180-0222	AR
SHIM,T=1.875 (Ref # 92180I)	92180-0223	AR
SHIM,T=1.925 (Ref # 92180J)	92180-0224	AR
SHIM,T=1.975 (Ref # 92180K)	92180-0225	AR
SHIM,T=2.375 (Ref # 92180L)	92180-1058	AR
SHIM,T=2.625 (Ref # 92180M)	92180-1059	AR
SHIM,T=2.675 (Ref # 92180N)	92180-1194	AR
SHIM,T=2.725 (Ref # 92180O)	92180-1195	AR
SHIM,T=2.775 (Ref # 92180P)	92180-1196	AR
SHIM,T=1.95 (Ref # 92180Q)	92180-1208	AR
SHIM,T=1.90 (Ref # 92180R)	92180-1209	AR
SHIM,T=1.85 (Ref # 92180S)	92180-1210	AR
SHIM,T=1.80 (Ref # 92180T)	92180-1211	AR
SHIM,T=1.75 (Ref # 92180U)	92180-1212	AR

© 2026 Kawasaki Motors Corp., U.S.A.