# 2014 JET SKI® ULTRA® 310R PARTS DIAGRAM

## Owner's Tools

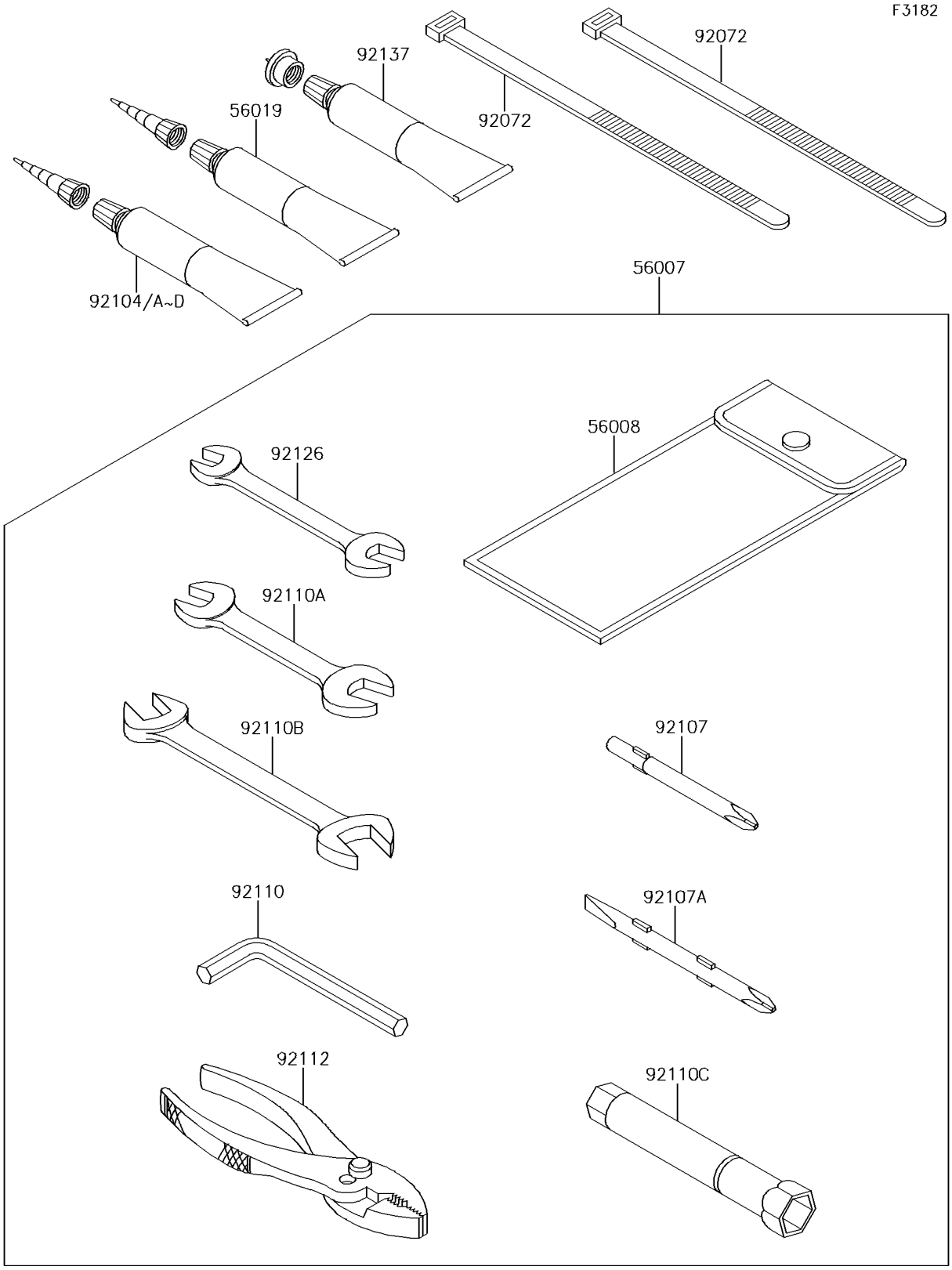


© 2024 Kawasaki Motors Corp., U.S.A.

# 2014 JET SKI® ULTRA® 310R PARTS LIST

Owner's Tools

| ITEM NAME | PART NUMBER | QUANTITY |
|---|---|---|
| TOOL-KIT (Ref # 56007) | 56007-3720 | 1 |
| BAG,TOOL (Ref # 56008) | 56008-3706 | 1 |
| GASKET-LIQUID,TB1211,WHITE (Ref # 56019) | 56019-120 | 1 |
| BAND,L=250 (Ref # 92072) | 92072-1237 | 2 |
| GASKET-LIQUID,TB1211F,CLEAR (Ref # 92104) | 92104-0004 | 1 |
| GASKET-LIQUID,TB1216,GRAY (Ref # 92104A) | 92104-1063 | 1 |
| GASKET-LIQUID,TB1216B,BLACK (Ref # 92104B) | 92104-1064 | 1 |
| GASKET-LIQUID,TB1215,GRAY (Ref # 92104C) | 92104-1065 | 1 |
| GASKET-LIQUID,TB1521,BROWN (Ref # 92104D) | 92104-3701 | 1 |
| TOOL-DRIVER,#3PHILLIPS (Ref # 92107) | 92107-005 | 1 |
| TOOL-DRIVER,#2PHILLIPS&SLOT (Ref # 92107A) | 92107-1051 | 1 |
| TOOL-WRENCH,ALLEN,5MM (Ref # 92110) | 92110-1015 | 1 |
| TOOL-WRENCH,OPEN END,10X12 (Ref # 92110A) | 92110-1152 | 1 |
| TOOL-WRENCH,OPEN END,14X17 (Ref # 92110B) | 92110-1153 | 1 |
| TOOL-WRENCH,BOX,16MM (Ref # 92110C) | 92110-3706 | 1 |
| TOOL-PLIERS (Ref # 92112) | 92112-1001 | 1 |
| TOOL-WRENCH,OPEN END,8X10 (Ref # 92126) | 92126-004 | 1 |
| GREASE (Ref # 92137) | 92137-1002 | 1 |

© 2024 Kawasaki Motors Corp., U.S.A.