2006 ZZR600 PARTS DIAGRAM

Cylinder Head

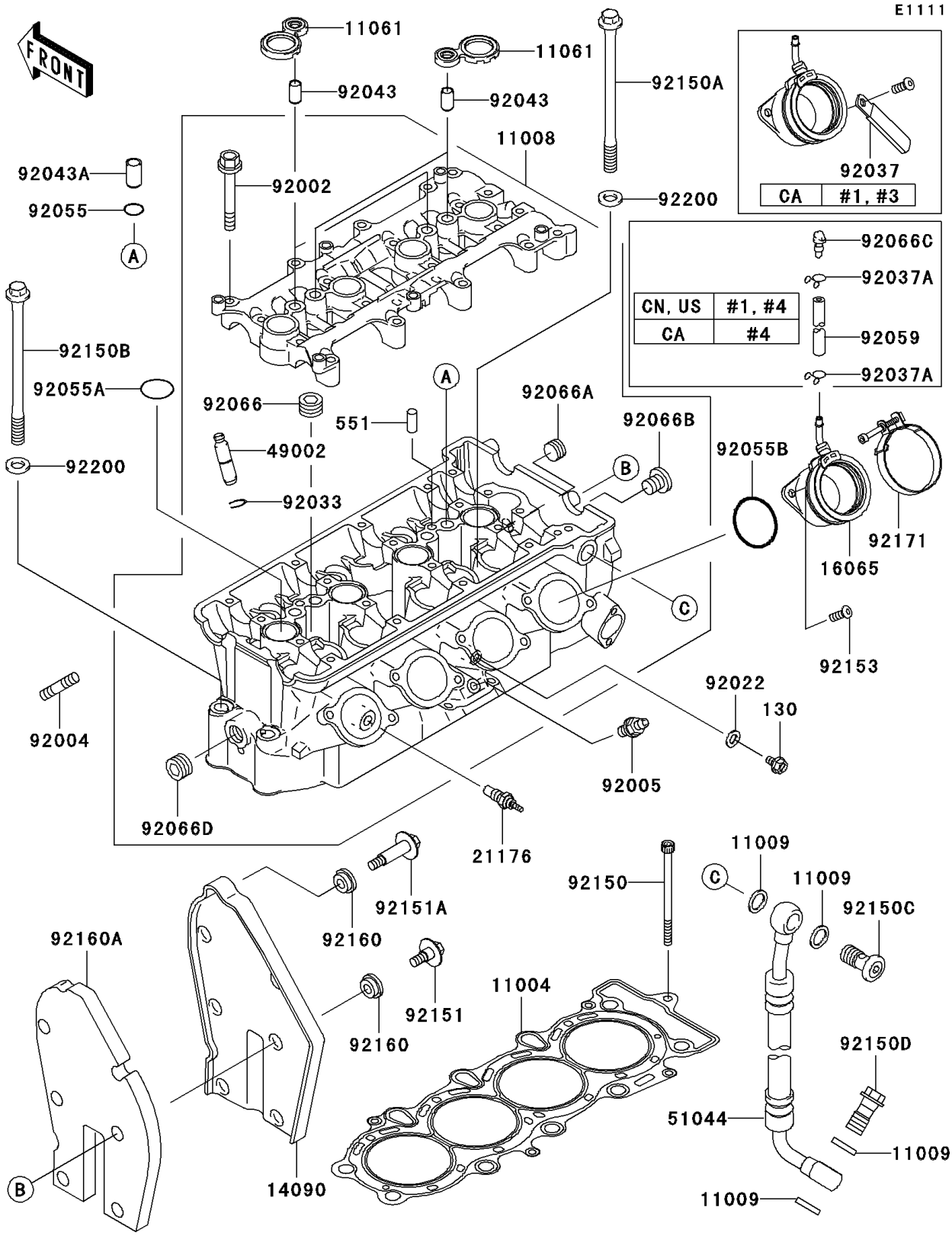

© 2024 Kawasaki Motors Corp., U.S.A.

2006 ZZR600 PARTS LIST

Cylinder Head

ITEM NAME	PART NUMBER	QUANTITY
GASKET-HEAD (Ref # 11004)	11004-1348	1
HEAD-COMP-CYLINDER (Ref # 11008)	11008-1397	1
GASKET,14X19.5X1.4 (Ref # 11009)	11009-1461	4
GASKET,BEARING CAP (Ref # 11061)	11061-0042	4
COVER (Ref # 14090)	14090-1900	1
HOLDER-CARBURETOR (Ref # 16065)	16065-1375	4
SENSOR (Ref # 21176)	21176-1075	1
GUIDE-VALVE (Ref # 49002)	49002-1144	AR
TUBE-ASSY,OIL (Ref # 51044)	51044-1179	1
BOLT,6X40 (Ref # 92002)	92002-1756	20
STUD,8X22 (Ref # 92004)	92004-0025	8
FITTING (Ref # 92005)	92005-1273	1
WASHER,6.2X11X1 (Ref # 92022)	92022-304	1
RING-SNAP (Ref # 92033)	92033-1247	16
PIN,6.2X8X14 (Ref # 92043)	92043-1263	4
PIN,8.2X10X14 (Ref # 92043A)	92043-1264	4
RING-O,11.7X1.4 (Ref # 92055)	92055-0073	4
RING-O,25.5X2 (Ref # 92055A)	92055-0074	4
RING-O,42X1.9 (Ref # 92055B)	92055-1536	4
PLUG,PT1/2X12.5 (Ref # 92066)	92066-0002	4
PLUG,PT1/8X7 (Ref # 92066A)	92066-1227	1
PLUG,PT1/4X8.9 (Ref # 92066B)	92066-1260	1
PLUG,PT3/8X10 (Ref # 92066D)	92066-1420	1
BOLT,SOCKET,6X92 (Ref # 92150)	92150-1928	1
BOLT,L=148 (Ref # 92150A)	92150-1934	8
BOLT,L=140 (Ref # 92150B)	92150-1935	2
BOLT (Ref # 92150C)	92150-1944	1
BOLT (Ref # 92150D)	92150-1945	1
BOLT,L=17 (Ref # 92151)	92151-1299	6

© 2024 Kawasaki Motors Corp., U.S.A.

2006 ZZR600 PARTS LIST

Cylinder Head

ITEM NAME	PART NUMBER	QUANTITY
BOLT,6X34 (Ref # 92151A)	92151-1836	1
BOLT-FLANGED,6X10 (Ref # 130)	130Y0610	1
PIN-DOWEL,6X12 (Ref # 551)	551A0612	2
BOLT,TORX,M6X14 (Ref # 92153)	92153-0406	8
DAMPER (Ref # 92160)	92160-1681	7
DAMPER (Ref # 92160A)	92160-1894	1
CLAMP (Ref # 92171)	92171-1155	4
WASHER,10.5X19X2.3 (Ref # 92200)	92200-1042	10
CLAMP,L=45 (Ref # 92037)	92037-1539	2
CLAMP (Ref # 92037A)	92037-1712	2
CLAMP (Ref # 92037A)	92037-1712	4
TUBE,4X9X100 (Ref # 92059)	92059-1058	1
TUBE,4X9X100 (Ref # 92059)	92059-1058	2
PLUG (Ref # 92066C)	92066-1347	1
PLUG (Ref # 92066C)	92066-1347	2

© 2024 Kawasaki Motors Corp., U.S.A.