2016 JET SKI® ULTRA® 310X PARTS DIAGRAM

Electrical Equipment

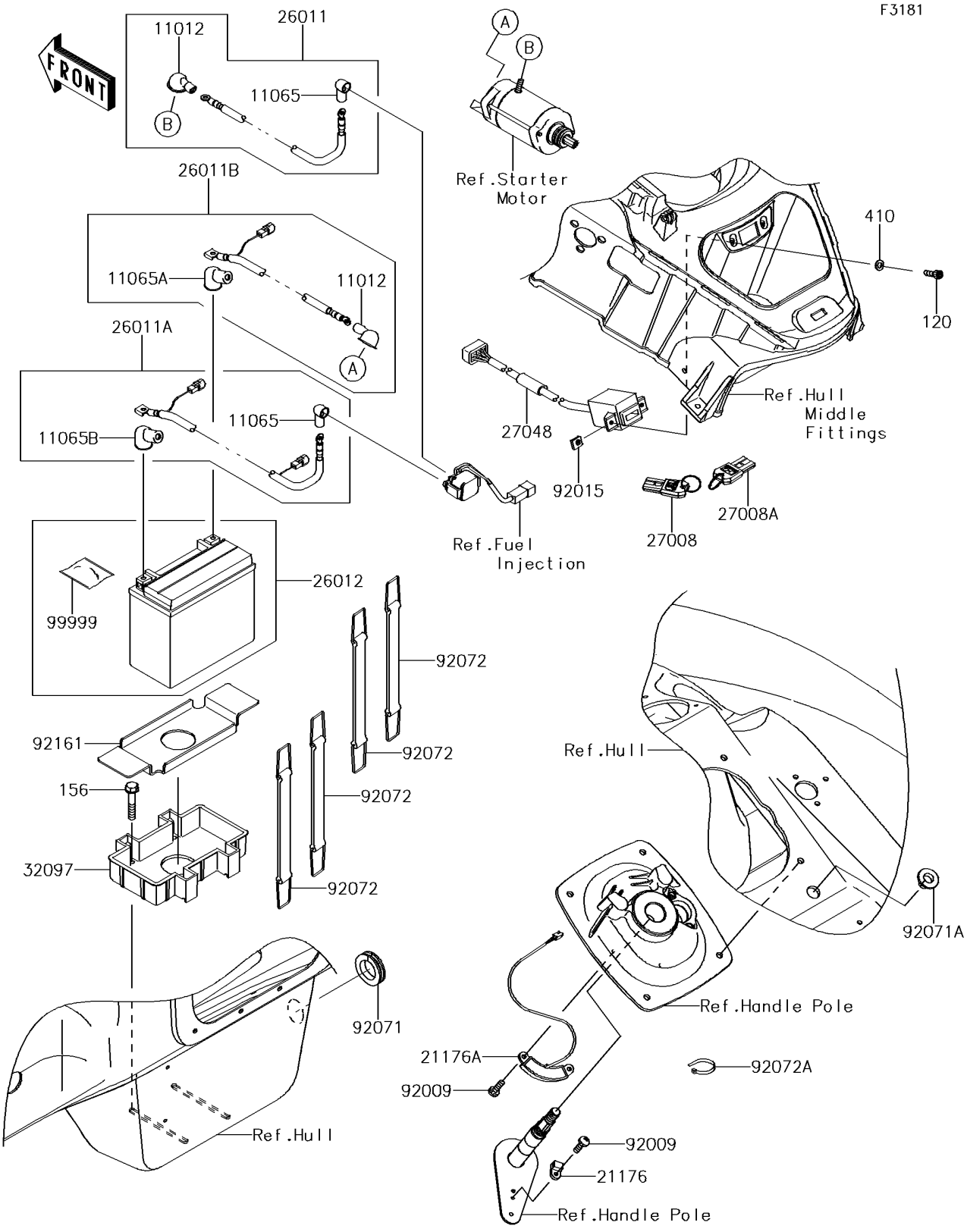

© 2024 Kawasaki Motors Corp., U.S.A.

2016 JET SKI® ULTRA® 310X PARTS LIST

Electrical Equipment

ITEM NAME	PART NUMBER	QUANTITY
CAP (Ref # 11012)	11012-3004	2
CAP (Ref # 11065)	11065-3716	2
CAP,TERMINAL (Ref # 11065A)	11065-3729	1
CAP,TERMINAL (Ref # 11065B)	11065-3732	1
BOLT-SOCKET,5X16 (Ref # 120)	120R0516	2
BOLT-WP,6X35 (Ref # 156)	156R0635	4
SENSOR,MAGNET (Ref # 21176)	21176-3746	1
SENSOR,HOLE IC (Ref # 21176A)	21176-3748	1
WIRE-LEAD,RELAY-STARTER (Ref # 26011)	26011-0723	1
WIRE-LEAD,BATTERY(+) (Ref # 26011A)	26011-0834	1
WIRE-LEAD,BATTERY(-) (Ref # 26011B)	26011-0835	1
BATTERY,YTX20L-BS,12V 18AH (Ref # 26012)	26012-3730	1
FPO MODE KEY (Ref # 27008)	27008-0566	1
SLO MODE KEY (Ref # 27008A)	27008-3768	1
SWITCH-ASSY (Ref # 27048)	27048-0004	1
CASE-BATTERY (Ref # 32097)	32097-3709	1
W-PLAIN-S,5MM (Ref # 410)	410S0500	2
SCREW,5X16 (Ref # 92009)	92009-3868	3
NUT,CLIP,5MM (Ref # 92015)	92015-3830	2
GROMMET,31.5X50X11 (Ref # 92071)	92071-0737	1
GROMMET (Ref # 92071A)	92071-3826	1
BAND,340X22 (Ref # 92072)	92072-3805	4
BAND,L=100.08 (Ref # 92072A)	92072-3882	1
DAMPER,BATTERY CASE (Ref # 92161)	92161-1388	1
BOLT NUT KIT (Ref # 99999)	99999-0311	1

© 2024 Kawasaki Motors Corp., U.S.A.