2017 Vulcan S ABS

PARTS DIAGRAM

Accessory(Windshield)

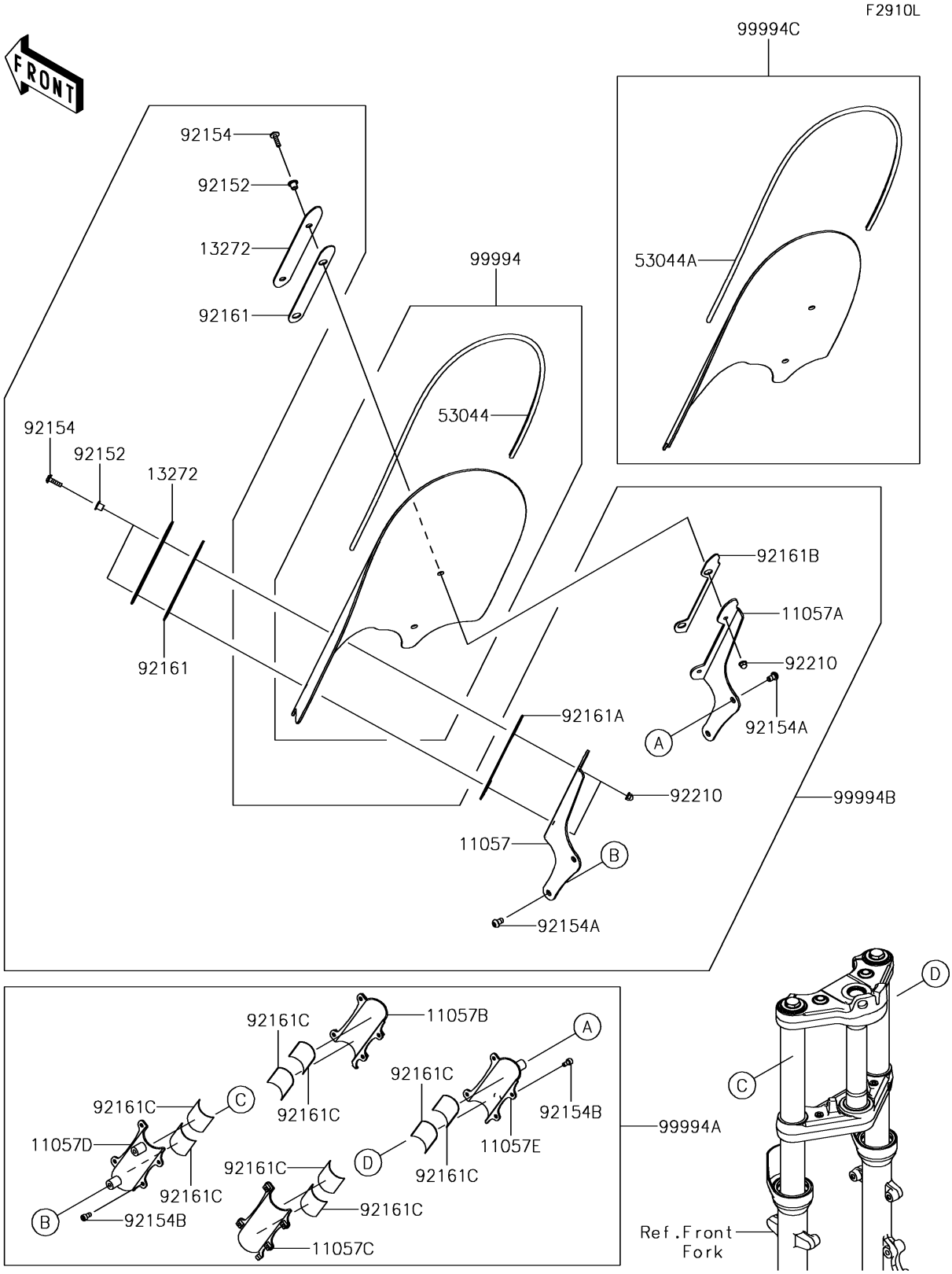

© 2026 Kawasaki Motors Corp., U.S.A.

2017 Vulcan S ABS

PARTS LIST

Accessory(Windshield)

Kawasaki
Let the Good Times Roll®

ITEM NAME	PART NUMBER	QUANTITY
BRACKET,LH (Ref # 11057)	11057-0212	1
BRACKET,RH (Ref # 11057A)	11057-0213	1
BRACKET,LH,INNER (Ref # 11057B)	11057-0215	1
BRACKET,RH,INNER (Ref # 11057C)	11057-0217	1
BRACKET,LH,OUTER (Ref # 11057D)	11057-0857	1
BRACKET,RH,OUTER (Ref # 11057E)	11057-0858	1
PLATE (Ref # 13272)	13272-2181	2
TRIM (Ref # 53044)	53044-0606	1
TRIM,WINDSHIELD,SHORT TYPE (Ref # 53044A)	53044-1272	1
COLLAR,6.8X10X10.9 (Ref # 92152)	92152-2261	4
BOLT,SOCKET,6X22 (Ref # 92154)	92154-0787	4
BOLT,SOCKET,8X14 (Ref # 92154A)	92154-1032	4
BOLT-SOCKET,6X12 (Ref # 92154B)	92154-2688	8
DAMPER (Ref # 92161)	92161-1862	2
DAMPER (Ref # 92161A)	92161-1863	1
DAMPER (Ref # 92161B)	92161-1864	1
DAMPER,60X140X1 (Ref # 92161C)	92161-1868	8
NUT,CAP,6MM (Ref # 92210)	92210-0322	4
KIT,WINDSHIELD LARGE W/O KQR (Ref # 99994)	99994-0823	1
KIT-ACCESSORY,WSHLD-BKT(F/F) (Ref # 99994A)	99994-0824	1
KIT-ACCESSORY,WSHLD-BKT (Ref # 99994B)	99994-0825	1
KIT,WINDSHIELD MEDIUM W/O KQR (Ref # 99994C)	99994-0828	1

© 2026 Kawasaki Motors Corp., U.S.A.