2018 VULCAN® S ABS PARTS DIAGRAM

Owner's Tools

F2810

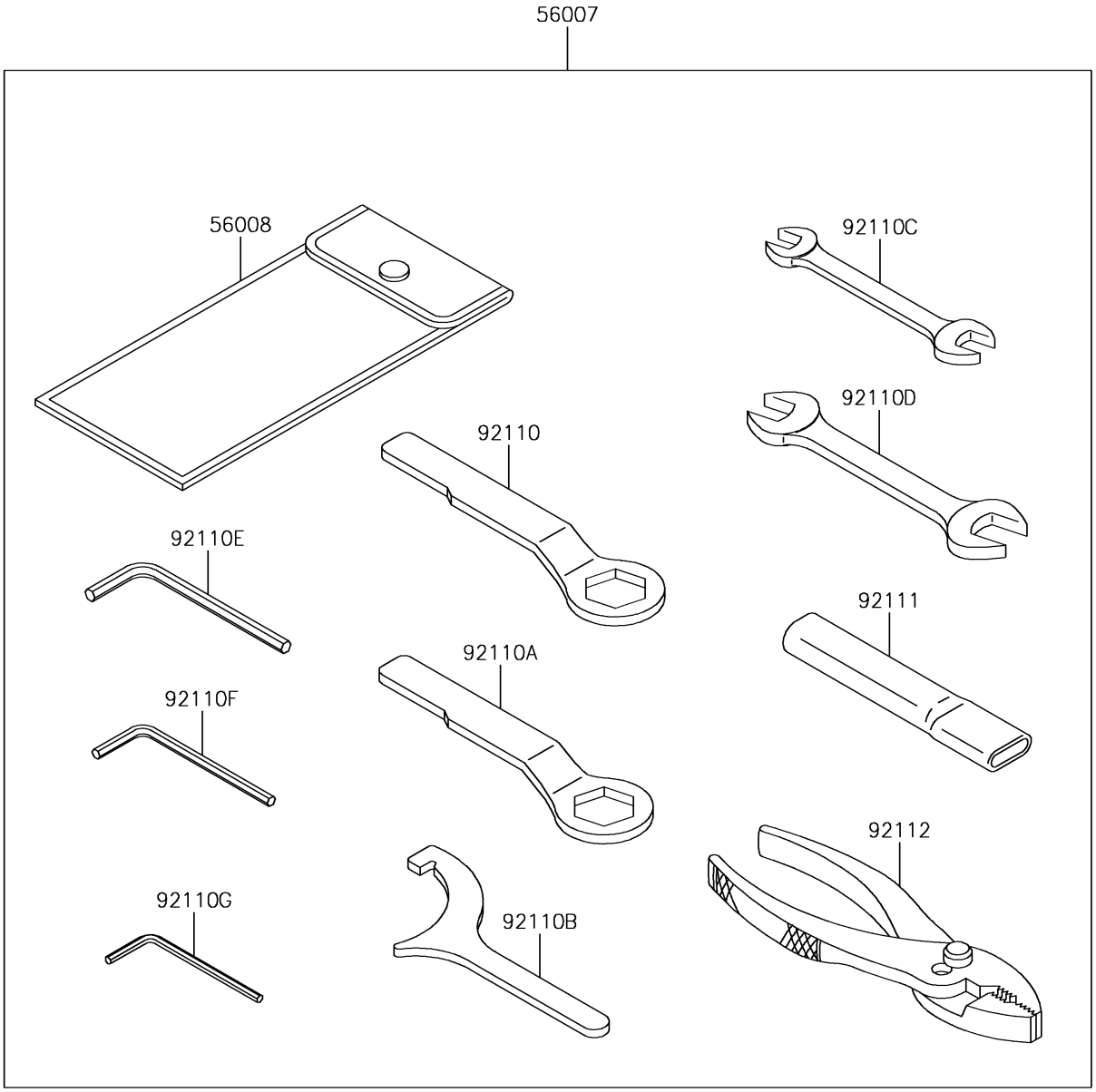

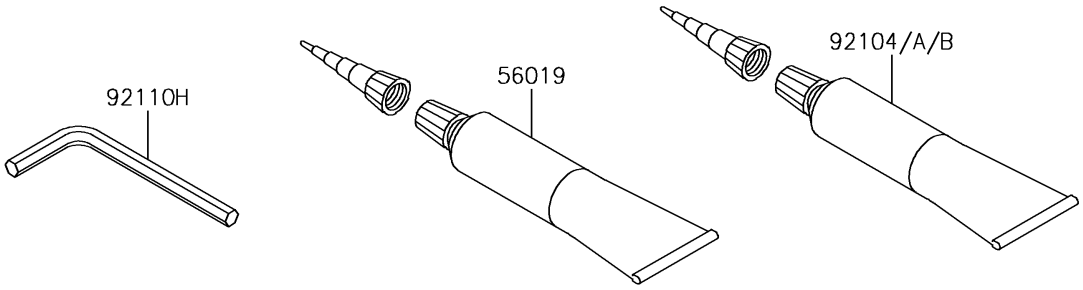

© 2024 Kawasaki Motors Corp., U.S.A.

2018 VULCAN® S ABS PARTS LIST

Owner's Tools

ITEM NAME	PART NUMBER	QUANTITY
TOOL-KIT (Ref # 56007)	56007-0129	1
BAG,TOOL (Ref # 56008)	56008-0036	1
GASKET-LIQUID,TB1211,WHITE (Ref # 56019)	56019-120	1
GASKET-LIQUID,TB1211F,CLEAR (Ref # 92104)	92104-0004	1
GASKET-LIQUID,TB1216B,BLACK (Ref # 92104A)	92104-1064	1
GASKET-LIQUID,TB1207B,BLACK (Ref # 92104B)	92104-2068	1
TOOL-WRENCH,BOX END,22MM (Ref # 92110)	92110-0064	1
TOOL-WRENCH,BOX END,27MM (Ref # 92110A)	92110-0065	1
TOOL-WRENCH,HOOK SPANNER,R37.5 (Ref # 92110B)	92110-0558	1
TOOL-WRENCH,OPEN END,10X12 (Ref # 92110C)	92110-0564	1
TOOL-WRENCH,OPEN END,12X14 (Ref # 92110D)	92110-0565	1
TOOL-WRENCH,ALLEN,5MM (Ref # 92110E)	92110-0566	1
TOOL-WRENCH,ALLEN,4MM (Ref # 92110F)	92110-0567	1
TOOL-WRENCH,ALLEN,3MM (Ref # 92110G)	92110-0577	1
TOOL-WRENCH,ALLEN,6MM (Ref # 92110H)	92110-0587	1
TOOL-BAR,WRENCH (Ref # 92111)	92111-0008	1
TOOL-PLIERS (Ref # 92112)	92112-0007	1

© 2024 Kawasaki Motors Corp., U.S.A.