1996 KLX650R PARTS DIAGRAM

Generator

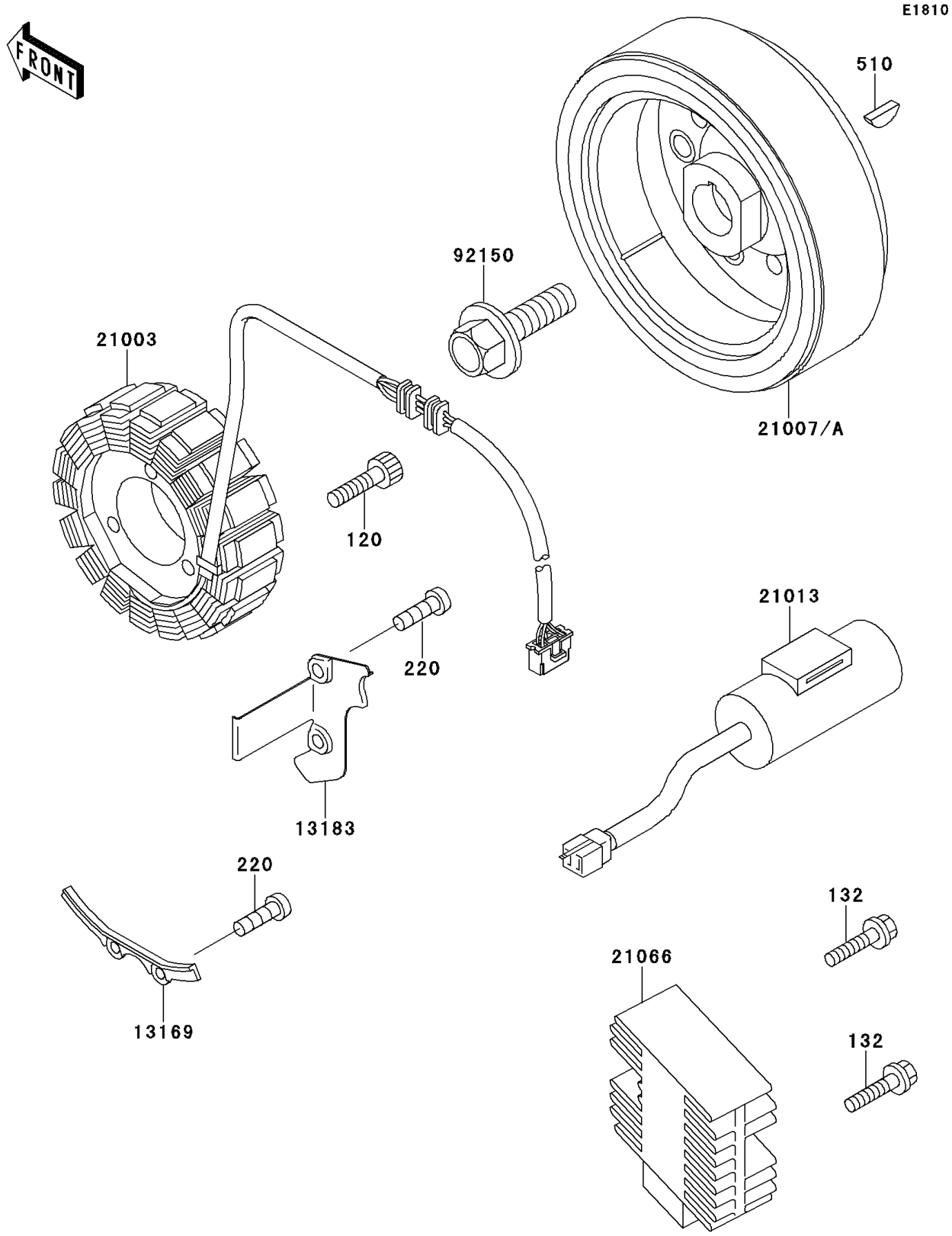

© 2026 Kawasaki Motors Corp., U.S.A.

1996 KLX650R PARTS LIST

Generator

ITEM NAME	PART NUMBER	QUANTITY
BOLT-SOCKET,5X30 (Ref # 120)	120P0530	3
BOLT-FLANGED-SMALL (Ref # 132)	132G0620	2
SCREW-PAN-CROS,5X8 (Ref # 220)	220B0508	4
KEY-WOODRUFF (Ref # 510)	510A3100	1
PLATE,PULSING COIL LEAD (Ref # 13169)	13169-1882	1
PLATE (Ref # 13183)	13183-1871	1
STATOR (Ref # 21003)	21003-1252	1
CONDENSER (Ref # 21013)	21013-1051	1
REGULATOR-VOLTAGE (Ref # 21066)	21066-1088	1
BOLT,12X50 (Ref # 92150)	92150-1708	1
ROTOR,MAGNETO (Ref # 21007)	21007-1269	1
ROTOR,MAGNETO (Ref # 21007A)	21007-1270	1

© 2026 Kawasaki Motors Corp., U.S.A.