2008 Ninja® ZX™-14 PARTS DIAGRAM

Crankcase Bolt Pattern

E1412

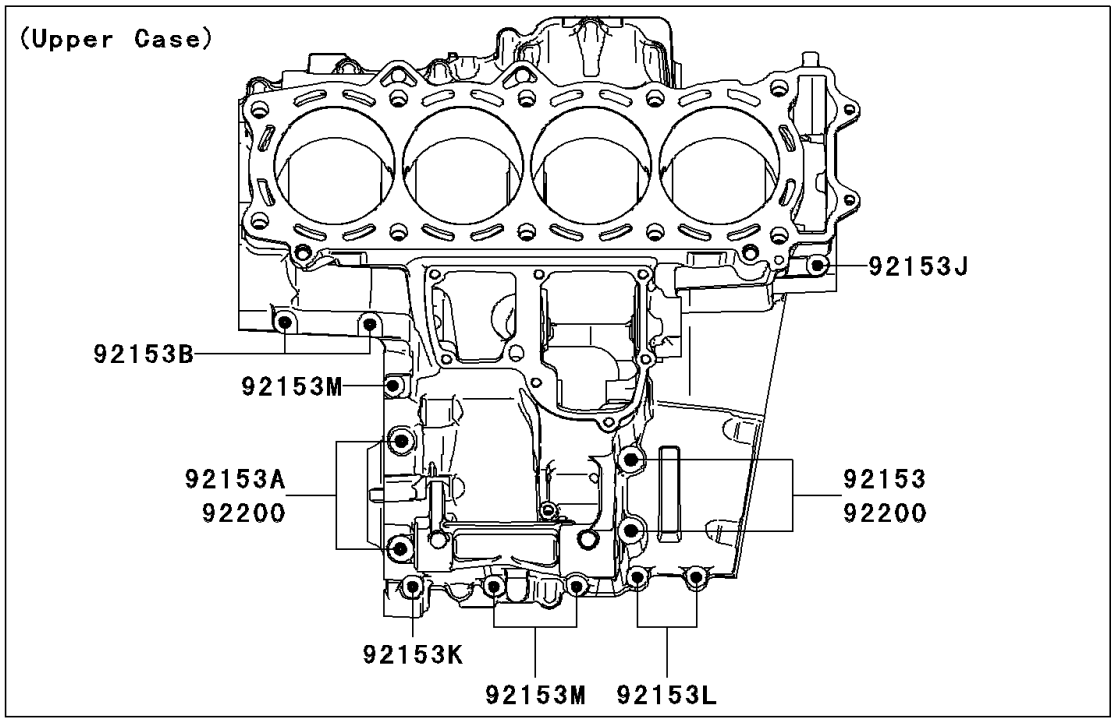

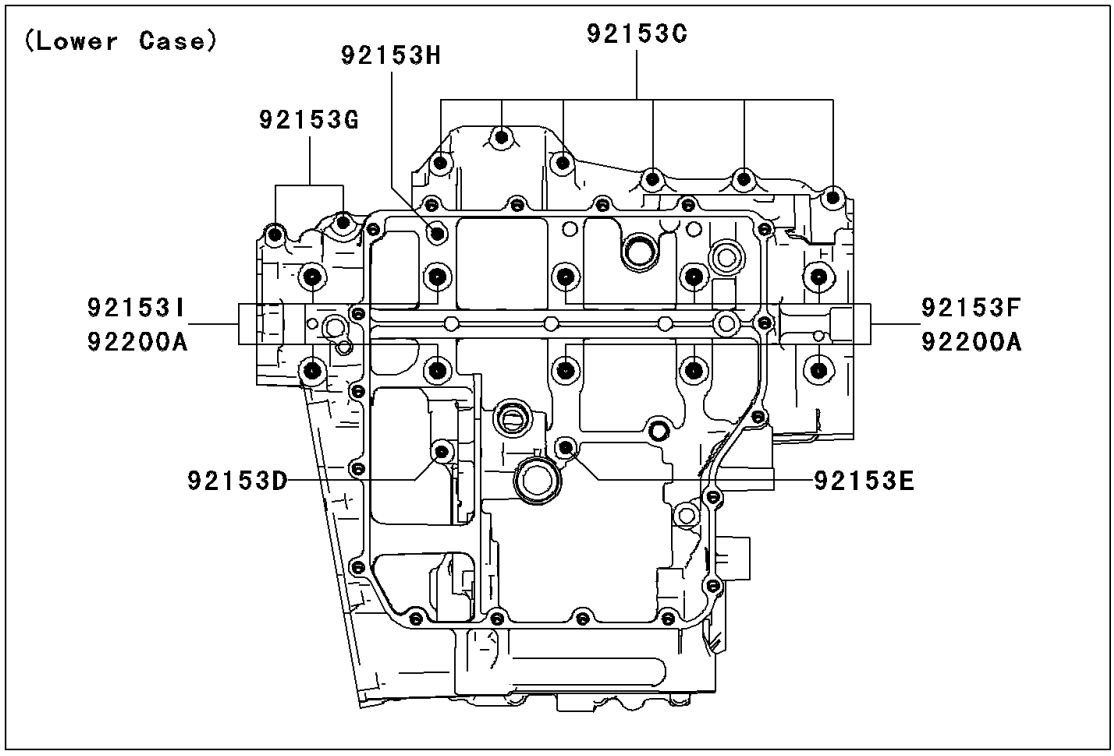

© 2026 Kawasaki Motors Corp., U.S.A.

2008 Ninja® ZX™-14 PARTS LIST

Crankcase Bolt Pattern

ITEM NAME	PART NUMBER	QUANTITY
BOLT,FLANGED,8X80 (Ref # 92153)	92153-1035	2
BOLT,FLANGED,8X70 (Ref # 92153A)	92153-1036	2
BOLT,FLANGED,7X65 (Ref # 92153B)	92153-1040	2
BOLT,FLANGED,7X45 (Ref # 92153C)	92153-1041	6
BOLT,FLANGED,7X50 (Ref # 92153D)	92153-1042	1
BOLT,FLANGED,7X85 (Ref # 92153E)	92153-1043	1
BOLT,FLANGED,10X90 (Ref # 92153F)	92153-1044	6
BOLT,FLANGED,7X60 (Ref # 92153G)	92153-1045	2
BOLT,FLANGED,7X110 (Ref # 92153H)	92153-1046	1
BOLT,FLANGED,10X120 (Ref # 92153I)	92153-1047	4
BOLT-FLANGED,6X65 (Ref # 92153J)	92153-1567	1
BOLT-FLANGED,6X50 (Ref # 92153K)	92153-1568	1
BOLT-FLANGED,6X25 (Ref # 92153L)	92153-1569	2
BOLT-FLANGED,6X40 (Ref # 92153M)	92153-1570	3
WASHER,8.2X16X1.6 (Ref # 92200)	92200-0047	4
WASHER,10.5X19X2.3 (Ref # 92200A)	92200-0257	10

© 2026 Kawasaki Motors Corp., U.S.A.