2009 Ninja ZX-6R Monster Energy PARTS DIAGRAM

Frame Fittings(Rear)

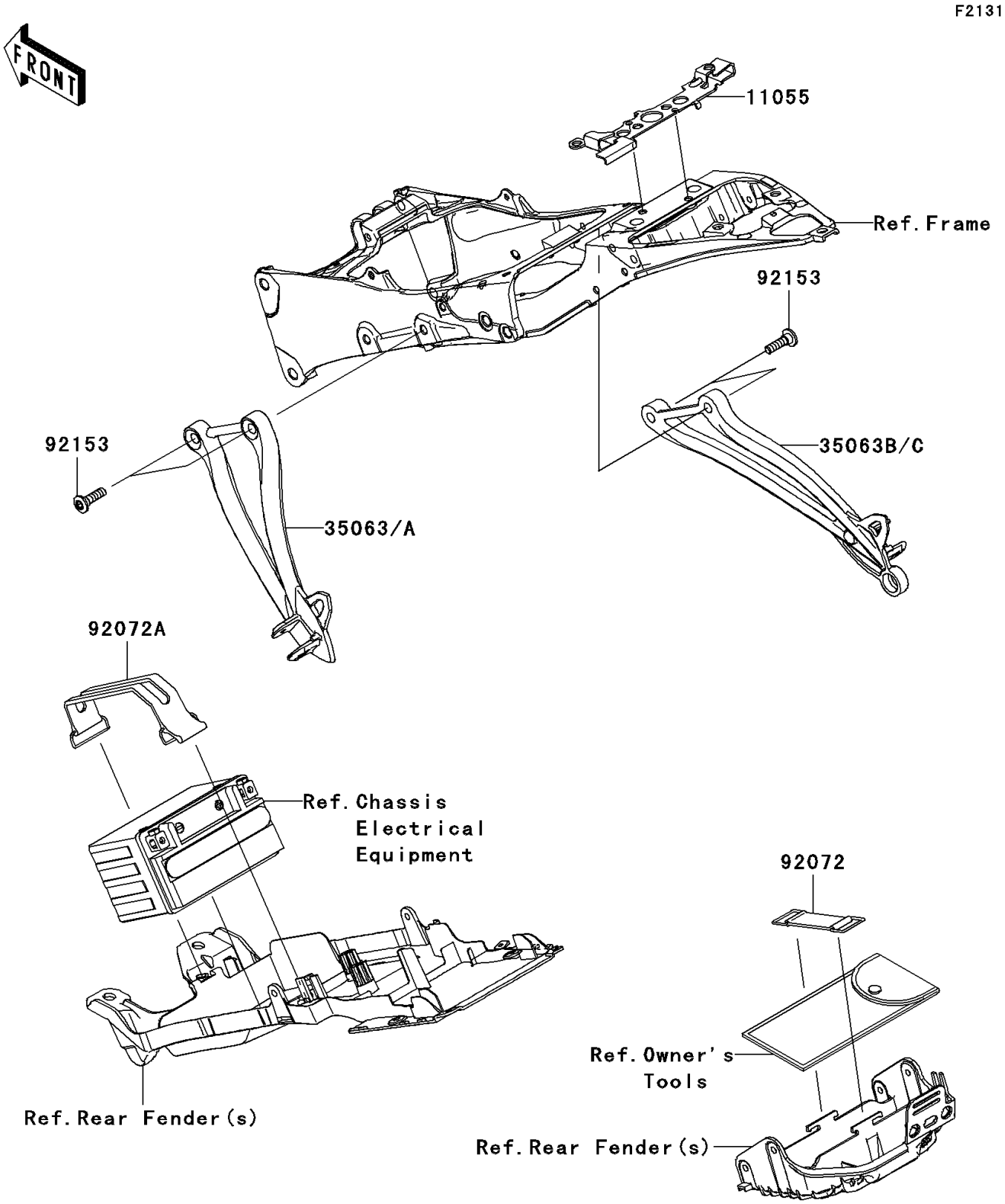

© 2024 Kawasaki Motors Corp., U.S.A.

2009 Ninja ZX-6R Monster Energy PARTS LIST

Frame Fittings(Rear)

ITEM NAME	PART NUMBER	QUANTITY
BRACKET,HELMET HOLDER (Ref # 11055)	11055-1011	1
STAY,RR,LH,F.S.BLACK (Ref # 35063)	35063-0444-11E	1
STAY,RR,RH,F.S.BLACK (Ref # 35063B)	35063-0445-11E	1
BAND (Ref # 92072)	92072-012	1
BAND,L=168 (Ref # 92072A)	92072-1306	1
BOLT,SOCKET,8X30 (Ref # 92153)	92153-1630	4

© 2024 Kawasaki Motors Corp., U.S.A.