# 2007 KLX250S PARTS DIAGRAM

## Front Master Cylinder

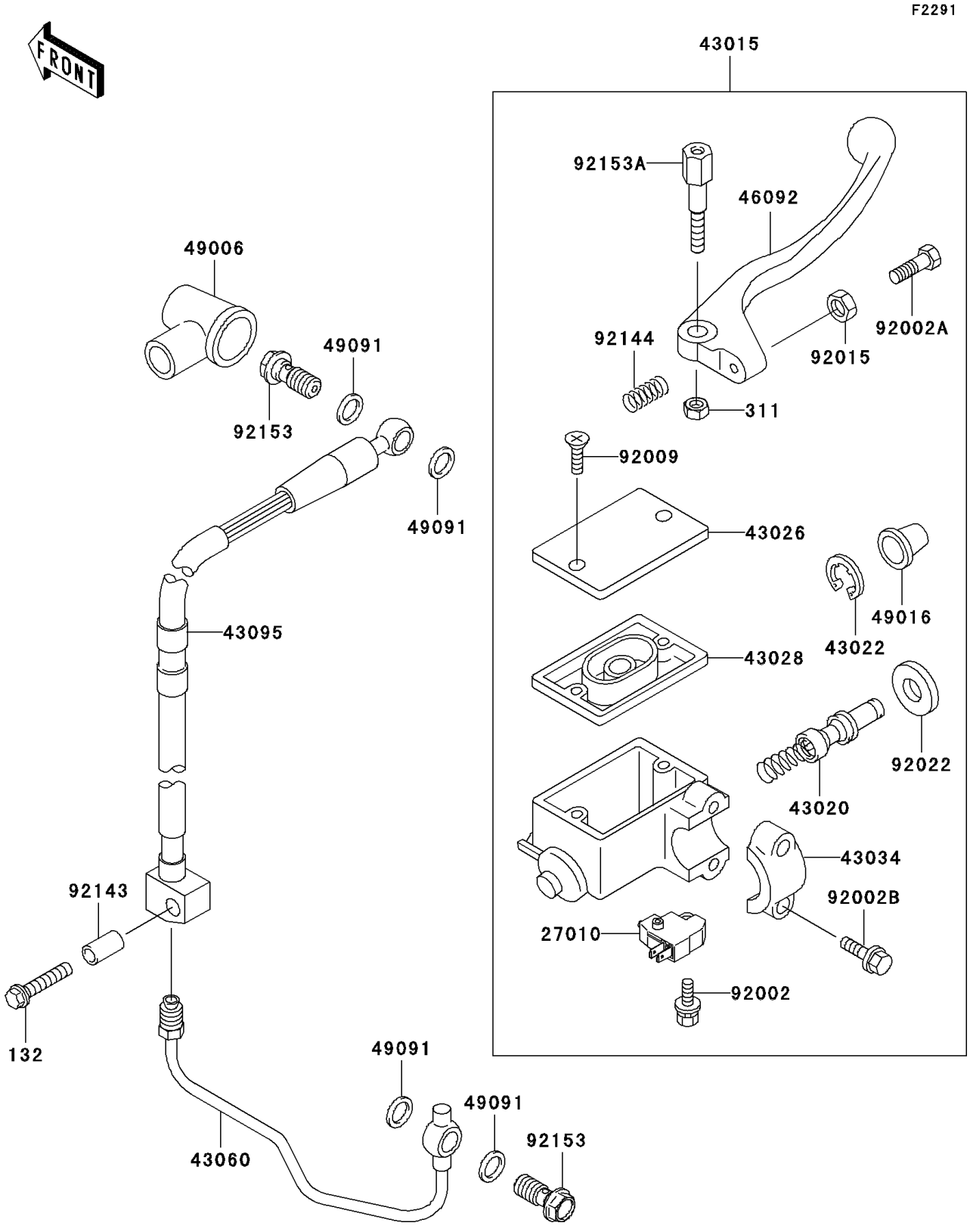


© 2024 Kawasaki Motors Corp., U.S.A.

# 2007 KLX250S PARTS LIST

Front Master Cylinder

| ITEM NAME | PART NUMBER | QUANTITY |
|---|---|---|
| BOLT-FLANGED-SMALL,6X30 (Ref # 132) | 132G0630 | 1 |
| NUT-HEX (Ref # 311) | 311L0600 | 1 |
| SWITCH,BRAKE (Ref # 27010) | 27010-0025 | 1 |
| CYLINDER-ASSY-MASTER,FR (Ref # 43015) | 43015-0040 | 1 |
| PISTON-COMP-BRAKE (Ref # 43020) | 43020-1065 | 1 |
| STOPPER-BRAKE,PISTON (Ref # 43022) | 43022-1010 | 1 |
| CAP-BRAKE (Ref # 43026) | 43026-1074 | 1 |
| DIAPHRAGM (Ref # 43028) | 43028-1061 | 1 |
| HOLDER-BRAKE,MASTER CYLINDER (Ref # 43034) | 43034-1016 | 1 |
| PIPE-BRAKE,FR (Ref # 43060) | 43060-1100 | 1 |
| HOSE-BRAKE,FR (Ref # 43095) | 43095-0163 | 1 |
| LEVER-GRIP,FRONT BRAKE (Ref # 46092) | 46092-1175 | 1 |
| BOOT,DUST (Ref # 49006) | 49006-1040 | 1 |
| COVER-SEAL,MASTER CYLINDER (Ref # 49016) | 49016-1044 | 1 |
| WASHER-SEAL,10.1X14.5X1.5 (Ref # 49091) | 49091-0001 | 4 |
| BOLT,SCREW,4X12 (Ref # 92002) | 92002-1323 | 1 |
| BOLT,ADJUST (Ref # 92002A) | 92002-1893 | 1 |
| BOLT (Ref # 92002B) | 92002-1894 | 2 |
| SCREW,4MM (Ref # 92009) | 92009-1458 | 2 |
| NUT,ADJUST (Ref # 92015) | 92015-1642 | 1 |
| WASHER (Ref # 92022) | 92022-1814 | 1 |
| COLLAR,6.5X9.5X17 (Ref # 92143) | 92143-1408 | 1 |
| SPRING,RETURN (Ref # 92144) | 92144-1103 | 1 |
| BOLT,OIL,L=23 (Ref # 92153) | 92153-0627 | 2 |
| BOLT,LEVER SET (Ref # 92153A) | 92153-0790 | 1 |

© 2024 Kawasaki Motors Corp., U.S.A.