# 1997 Bayou 300 PARTS DIAGRAM

## Frame Fittings

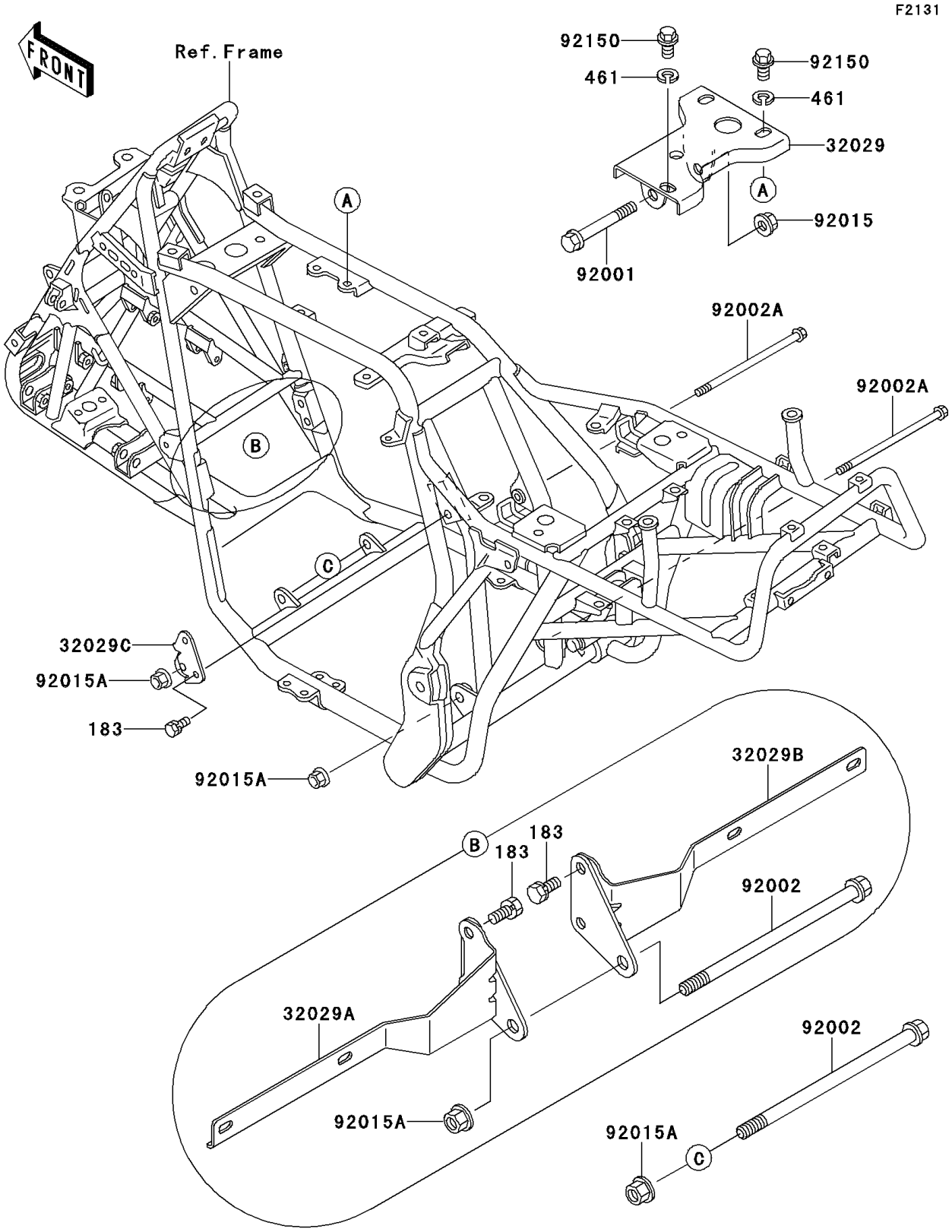


© 2024 Kawasaki Motors Corp., U.S.A.

# 1997 Bayou 300 PARTS LIST

## Frame Fittings

| ITEM NAME | PART NUMBER | QUANTITY |
|---|---|---|
| BOLT-UPSET-WS-SMALL (Ref # 183) | 183J0818 | 6 |
| WASHER-SPRING,8MM,BLACK (Ref # 461) | 461K0800 | 3 |
| BRACKET-ENGINE,TOP (Ref # 32029) | 32029-1569 | 1 |
| BRACKET-ENGINE,LH (Ref # 32029A) | 32029-1594 | 1 |
| BRACKET-ENGINE,RH (Ref # 32029B) | 32029-1595 | 1 |
| BRACKET-ENGINE (Ref # 32029C) | 32029-1597 | 1 |
| BOLT,FLANGED,8X60,BLACK (Ref # 92001) | 92001-1615 | 1 |
| BOLT,FLANGED,10X180 (Ref # 92002) | 92002-1546 | 2 |
| BOLT,FLANGED,10X190 (Ref # 92002A) | 92002-1548 | 2 |
| NUT,8MM (Ref # 92015) | 92015-1432 | 1 |
| NUT,FLANGED,10MM (Ref # 92015A) | 92015-1727 | 4 |
| BOLT,FLANGED,8X14 (Ref # 92150) | 92150-1066 | 3 |

© 2024 Kawasaki Motors Corp., U.S.A.