1989 Bayou 300 PARTS DIAGRAM

Carrier

F2520

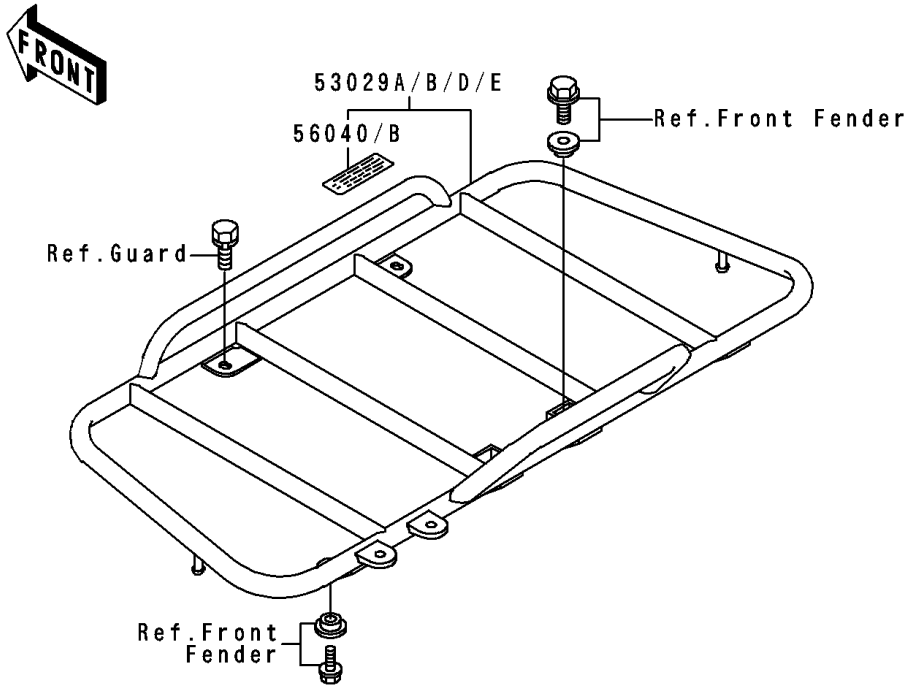

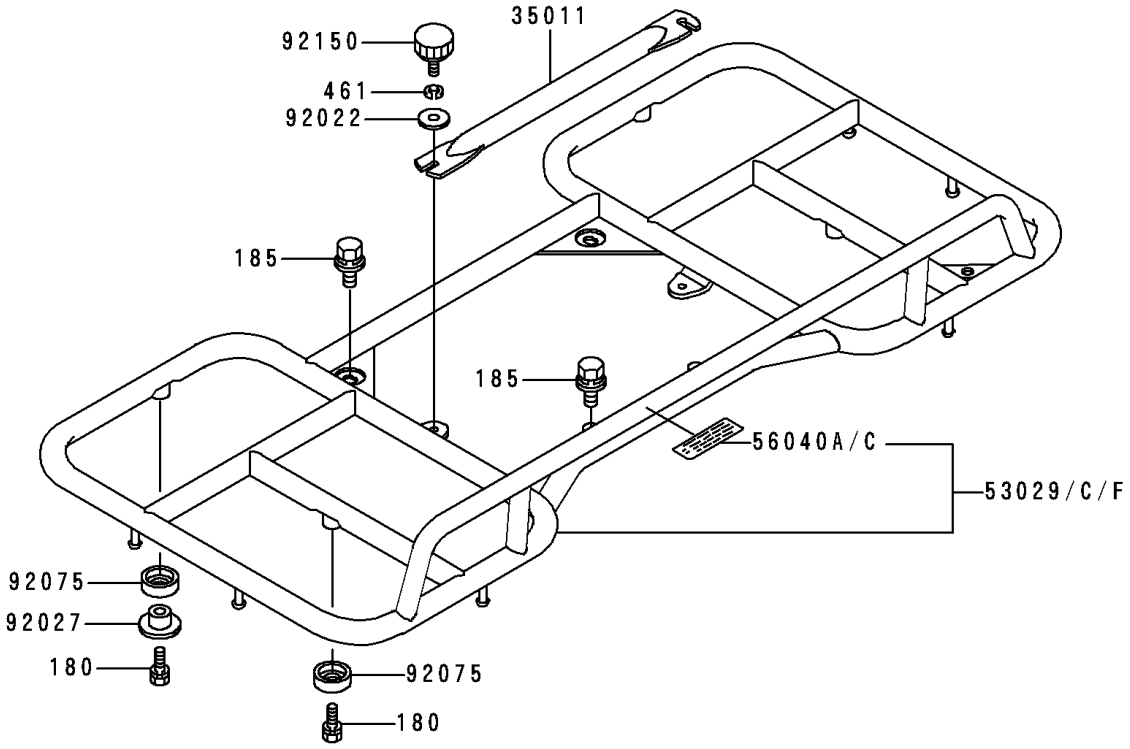

© 2024 Kawasaki Motors Corp., U.S.A.

1989 Bayou 300 PARTS LIST

Carrier

ITEM NAME	PART NUMBER	QUANTITY
BOLT-UPSET-WS (Ref # 180)	180D0618	4
BOLT-UPSET-WSP-SMALL (Ref # 185)	185C0816	4
WASHER-SPRING,6MM,BLACK (Ref # 461)	461K0600	2
STAY,REAR CARRIER (Ref # 35011)	35011-1388	1
LABEL-WARNING,MAXIMUM LOAD (Ref # 56040B)	56040-1259	1
LABEL-WARNING,MAXIMUM LOAD (Ref # 56040C)	56040-1260	1
WASHER,6.5X20X1.6,BLACK (Ref # 92022)	92022-1346	2
COLLAR (Ref # 92027)	92027-1906	2
DAMPER (Ref # 92075)	92075-1763	4
BOLT,6MM (Ref # 92150)	92150-1067	2
CARRIER,RR (Ref # 53029C)	53029-1116	1
CARRIER,FR (Ref # 53029D)	53029-1117	1
CARRIER,FR (Ref # 53029E)	53029-1121	1
CARRIER,RR (Ref # 53029F)	53029-1123	1

© 2024 Kawasaki Motors Corp., U.S.A.