1990 Bayou 300 PARTS DIAGRAM

Change Drum/Shift Fork

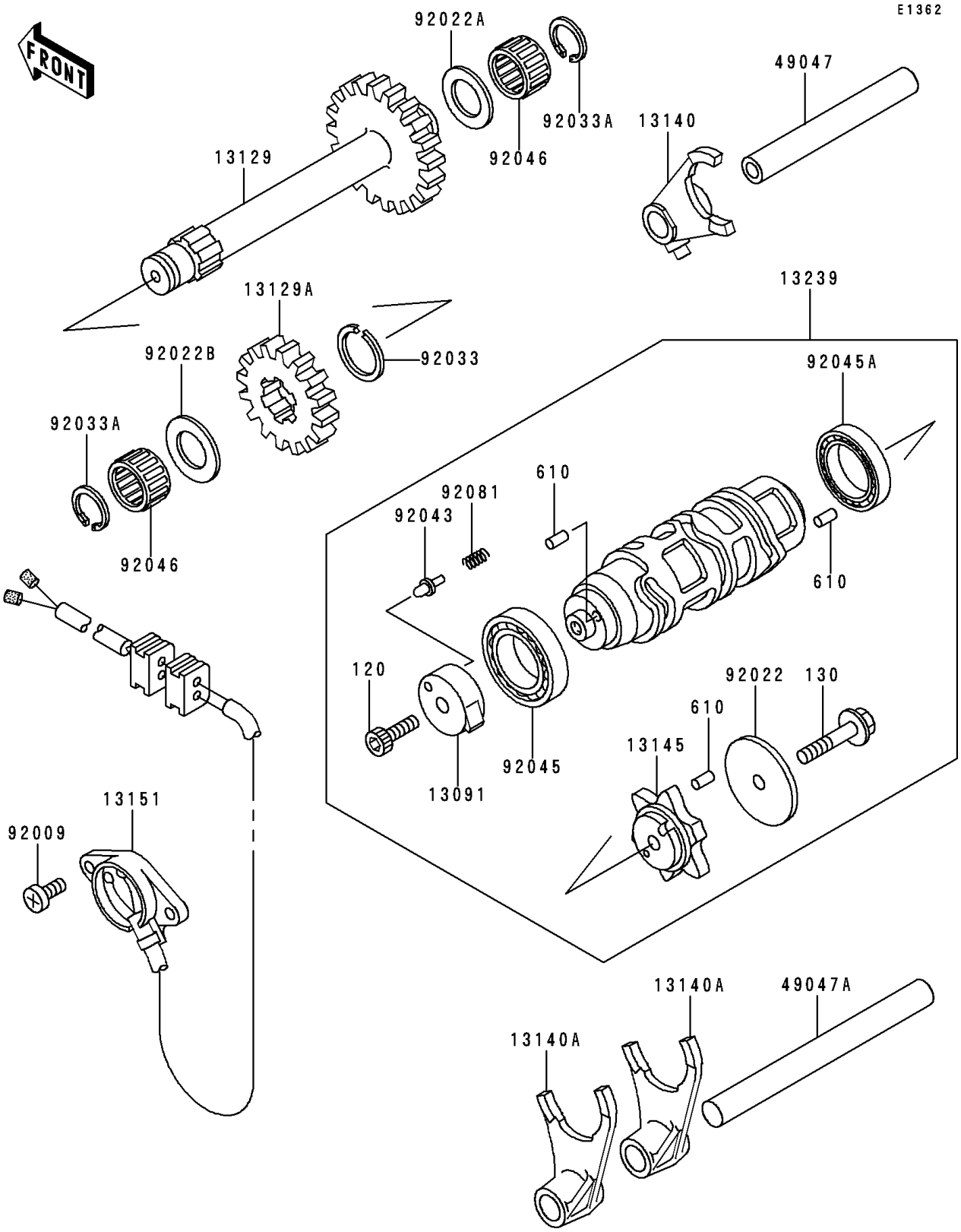

© 2026 Kawasaki Motors Corp., U.S.A.

1990 Bayou 300 PARTS LIST

Change Drum/Shift Fork

ITEM NAME	PART NUMBER	QUANTITY
BOLT-SOCKET,6X20 (Ref # 120)	120Q0620	1
BOLT-FLANGED,6X30 (Ref # 130)	130G0630	1
ROLLER,4X10 (Ref # 610)	610A0410	8
HOLDER,NEUTRAL SWITCH (Ref # 13091)	13091-1443	1
GEAR-REVERSE (Ref # 13129)	13129-1705	1
GEAR-REVERSE,20T (Ref # 13129A)	13129-1706	1
FORK-SHIFT (Ref # 13140)	13140-1134	1
FORK-SHIFT (Ref # 13140A)	13140-1135	2
CAM-CHANGE DRUM (Ref # 13145)	13145-1064	1
SWITCH-COMP (Ref # 13151)	13151-1072	1
DRUM-ASSY-CHANGE (Ref # 13239)	13239-1154	1
ROD-SHIFT,L=93.7 (Ref # 49047)	49047-1003	1
ROD-SHIFT (Ref # 49047A)	49047-1062	1
SCREW,5X14 (Ref # 92009)	92009-1341	2
WASHER,6.2X38X1.2 (Ref # 92022)	92022-1500	1
WASHER,17.3X28X1 (Ref # 92022A)	92022-255	1
WASHER,17.3X30X1.4 (Ref # 92022B)	92022-270	1
RING-SNAP,20X25.5X1.2 (Ref # 92033)	92033-025	1
RING-SNAP (Ref # 92033A)	92033-032	2
PIN (Ref # 92043)	92043-1287	1
BEARING-BALL,6805 (Ref # 92045)	92045-1122	1
BEARING-BALL,6905X1 (Ref # 92045A)	92045-1150	1
BEARING-NEEDLE,K17X23X13.8 (Ref # 92046)	92046-1184	2
SPRING (Ref # 92081)	92081-1763	1

© 2026 Kawasaki Motors Corp., U.S.A.